Ultrasonic actuator

TULA series

designed by Starline - Freepik.com

High precision system solutions

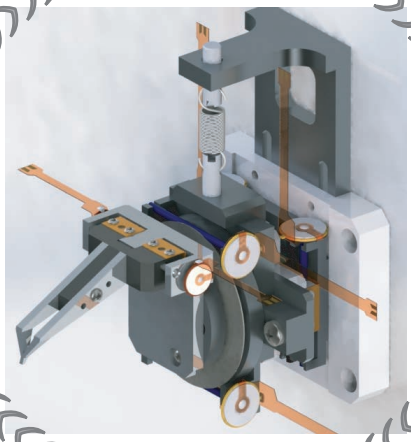

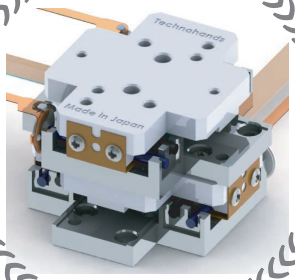

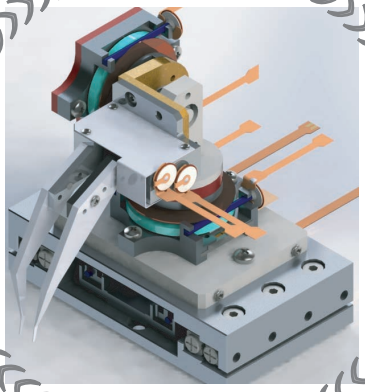

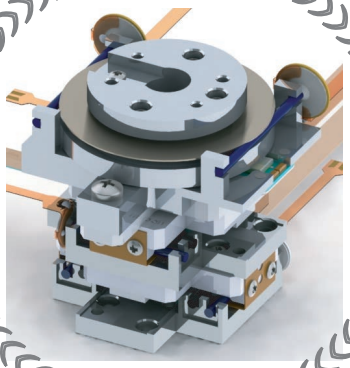

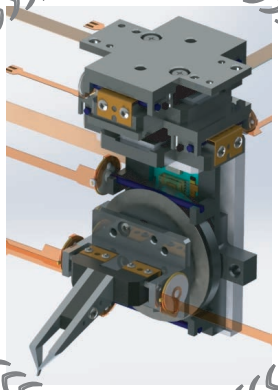

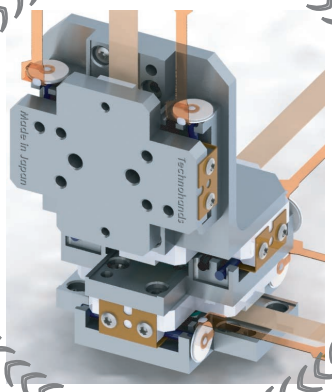

- Medical
- Biotechnology
- Laser applications
- Semiconductor positioning
- Optical fiber applications
- Micro parts assembly robot

Akribis
where precision matters

Tiny ultrasonic linear actuator

Overview

In general, actuators in mainstream use are electromagnetic and fluid (air and oil pressure) types, but in recent years, ultrasonic motors have appeared as a completely new trend. They were previously used in the industrial field but they are now increasingly being used as mobile actuators for digital cameras and cellular phones. We coordinate with our company partners to commercialize new products. Offering much sounder, better service. From rotary modules to linear module, we supply our customers with a wide variety of this latest developed ultrasonic motors.

Ultrasonic motor

Generally the ultrasonic motor is mechanism, by the piezoelectric effect of pezoelectrical ceramic, it converts ultrasonic vibration movement into linear or rotary movement. Because of using frictional force, motor can completely stop without power by that frictional force.

Main features

- Attain low speed and high torque (thrust) without slowing down the machine
- Maintain high torque (thrust), with no electric current present, therefore, no heat is generated
- Small driving noise
- When movement is stopped, frictional force brings movement to a complete stop with no unwanted vibration or heat generation.
- Direct mechanism allows high machine responsiveness
- Simple and fewer parts allow for decrease in mass production cost
- Nonmagnetic construction allows for unaffected operation in presence of magnets
- Vacuum application is available by changing materials (10^{-5} Pa)
- Adopted TULA for axial lubrication, guide axis is unnecessary

Applications

- Stage for microscopes
- Small stage for interferometers
- Stage for vacuum using
- Stage for medical planes
- Stage for semiconductor
- Precisely small stage
- Mirror alignment unit for optical system
- Camera (AF, Zoom, Anti-shaking)
- Scara Robot
- Flow quantity adjustment for valve, nozzle
- Actuator for security cameras
- Laser beam adjustment unit
- Small ink jet stage
- Small manipulator
- Stage for object lenses
- Industrial shutter
- Unit for Braille
- IR filter actuation for cameras
- Measurement machine
- Stage for zero gravity
- Stage for strong magnetic environment

Drive principle of TULA

Drive principle

Tiny ultrasonic linear actuator. TULA is unimorph type or a bimorph type next generation actuator on the vibration control of piezoceramic. Piezoelectric ceramic is fixed to the root of the driving shaft, and put the preload friction body(moving body) on drive shaft, when stopped, it maintain without slight vibration such as electromagnetic motor did, also no heat. The movement principle is piezoelectric ceramic vibrates and reaches the drive shaft, pulls the friction body by changing the duty ratio of going and return, using this action to moving the unite distance. With small movement controlled by high vibration frequency, actuator can move smoothly. For as a micro miniature shape, the actuator for positioning can gets a thrust, retentively highly and best suitable for positioning actuators.

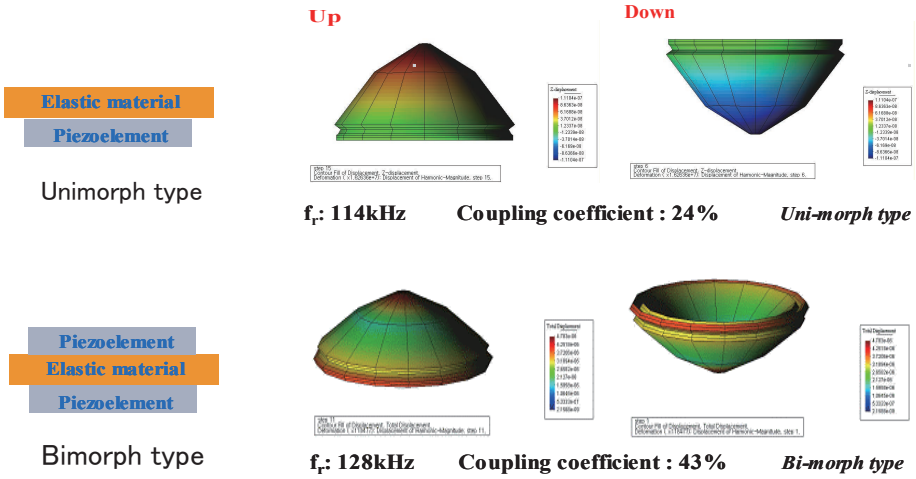

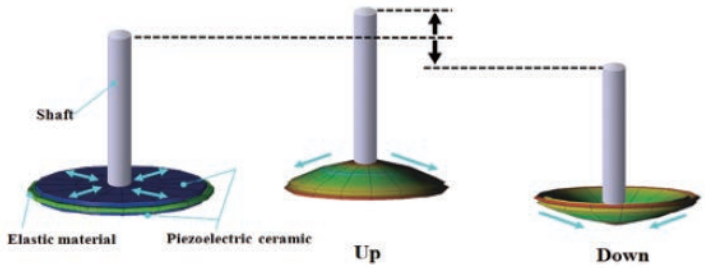

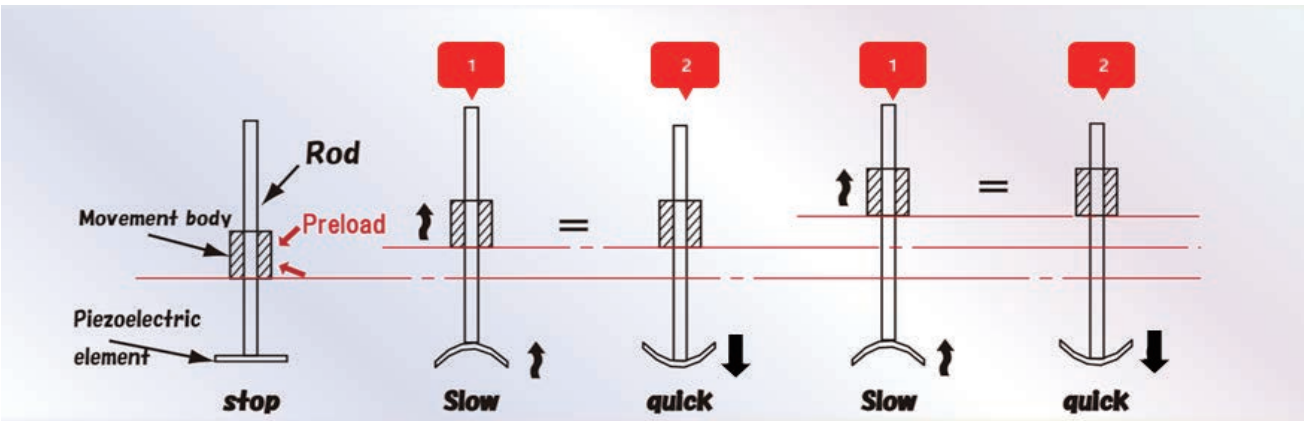

1. When a piezoelectric element turns in an upper direction, I turn slowly and move a shaft and a moving body together.
2. When a piezoelectric element turns in a lower direction, I turn early and pull only a shaft.

A Movement body moves by the impact drive of the Duty ratio of Slow(75%) and quick(25%).
As repeat this exercise at around 70,000 times(TULA50) of speed for one second, actually, is continued, and as for by some, movement is smooth move.
(The number of vibrations of one second changes by structure)

Tiny ultrasonic linear actuator

TULA35, 50, 70

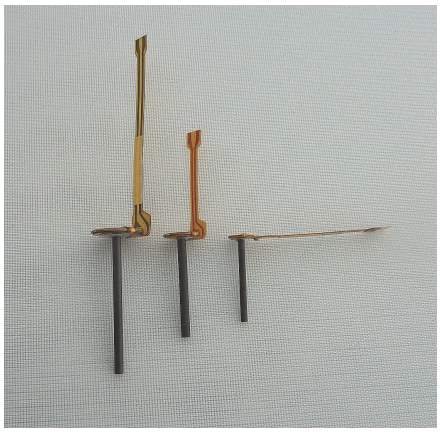

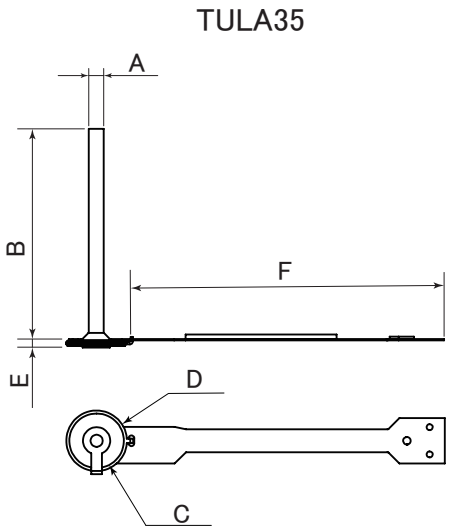

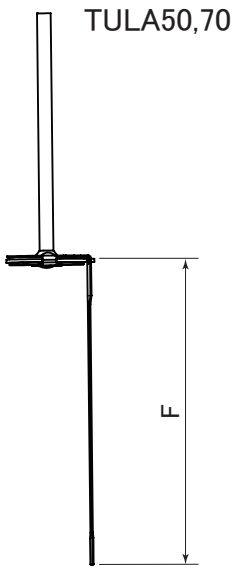

	Actuator		
TYPE	TULA35	TULA50	TULA70
Oscillator	φ3.8mm	φ5.0mm	φ7.0mm
Rod Length	14mm	16.5mm	22mm
Rod Diameter	1.0mm	1.3mm	1.3mm
Stroke	3～6mm	3～9mm	3～15mm
Thrust Power	15～25gf	25～40gf	40gf
Holding Force	30～80gf	100～150gf	150gf
Driving Frequency	70～100kHz	50～90kHz	30～70kHz
Driving Voltage	12～30V	10～35V	20～35V
Weight	0.08g	0.2g	0.36g

Operating Temp : +10～+50℃
Storage Temp : −10～+60℃
Humidity : 0～80% (without dew condensation)

Size	Actuator		
TYPE	TULA35	TULA50	TULA70
A	φ1	φ1.3	φ1.3
B	14	16.5	22
C	φ3.8	φ5.0	φ7.0
D	φ4.0	φ5.5	φ7.6
E	0.6	0.7	1
F	21	18.6	28

NOTE
- TULA35 : It's the side for cables.
- TULA50,70 : I t's lengthwise for cables.
- Rod length : It's possible to change it to 3mm.
- Thrust pawer,Holdeing force fluctuates by pressurization of a movemet body.
- You prepare a frictional body.

Please consider in reference to a bottom.
In addition, We set up the kit for the evaluation including the friction body.
The next page referring.

Moving body examples

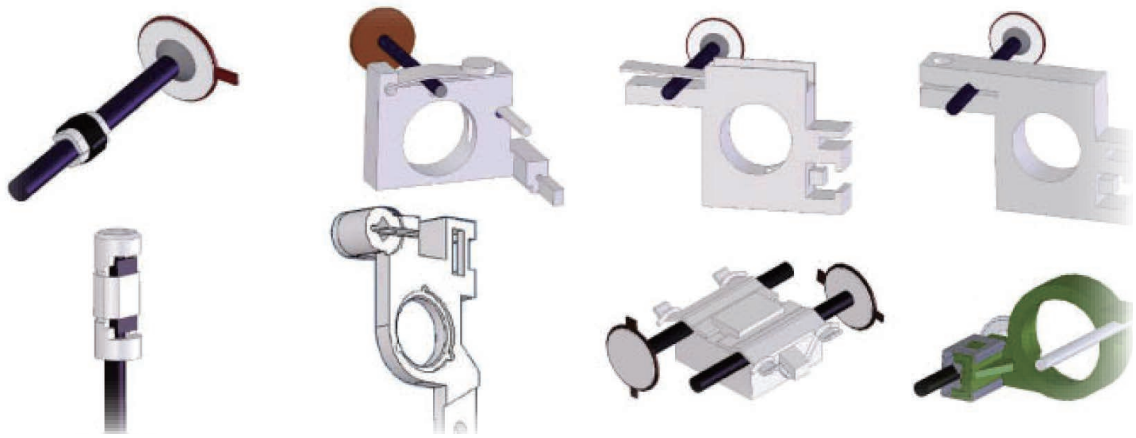

Tiny ultrasonic linear actuator : Evaluation Kit

ST50A-16.5 / ST70A-22

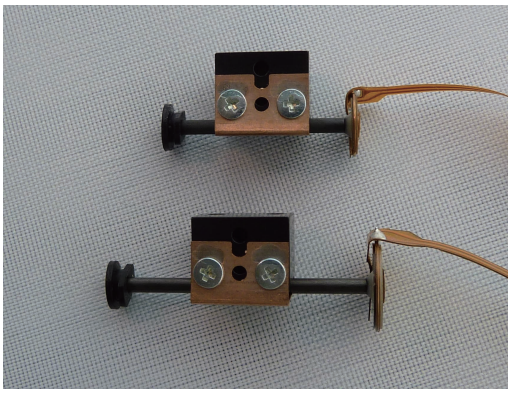

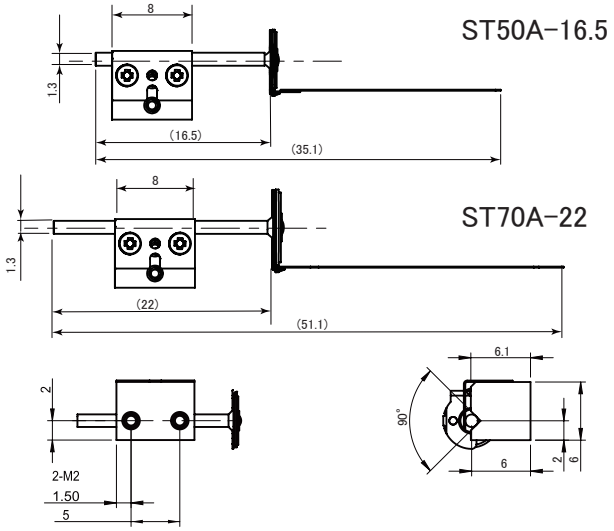

ST35B-14

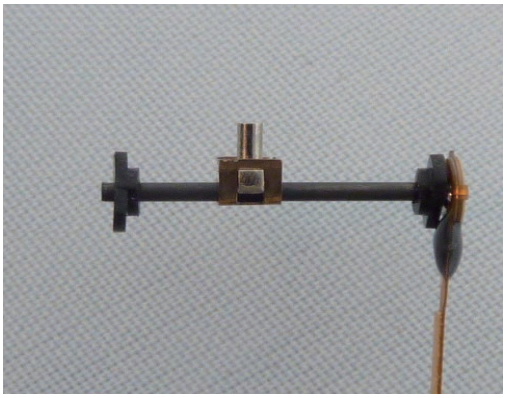

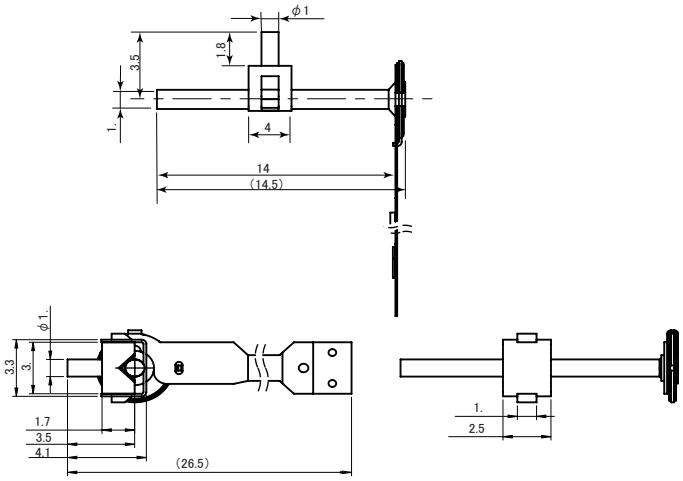

Evaluation Kit composition

Each Unit
(Cable length : 50cm)

+

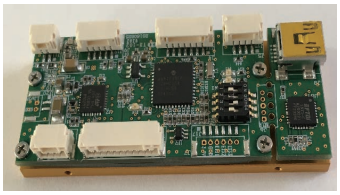

TD-102 (Driver)
(with Simple Soft CD)

+

Power supply for DC5V

+

USBcable

	ST50A、70A Kit	ST35B Kit
Thrust Power	40～60gf	30～50gf
Holding Force	150gf	70～150gf

Tiny ultrasonic linear actuator

Evaluation Kit & X axis stage(with Enc) Connection

ST35B-14 Evaluation Kit connection

TULA X stage (with Enc) Connection

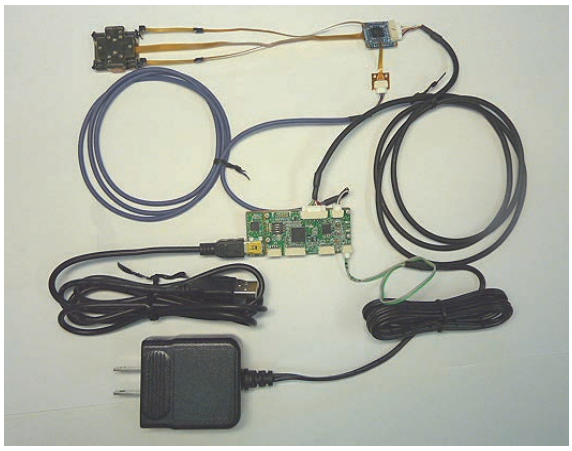

TULA stage Model number / Structure

When you assemble parts(TULA35,50,70), it is necessary to put it between a drive shaft with the moving body which preload depended on. If not understanding, please inquire.

We'll offer you a stage variously in the following structure.
Also we'll make a design about the custom specification.

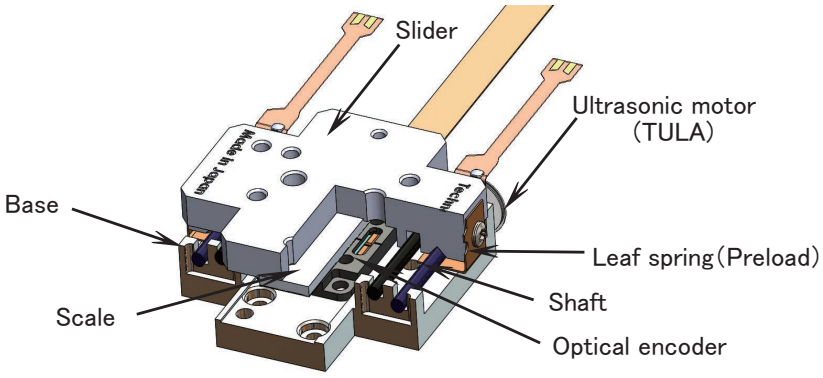

Model number : X D T70 - 15 5

① ② ③ ④ ⑤

①

Stage Type	
X :	X stage
Y :	XY stage
XYZ :	XYZ stage
θ :	θ stage
F :	Finger

②

Actuator / Guide / Stage	
S :	1 actuator
D :	2 actuators
HD :	Hollowstage
C :	2 cross roller guide
CW :	1 cross roller guide
LG :	1 linear guid
MD :	Mini stage
U :	Both side drive Finger
SU :	One said drive Finger
DU :	Both sides double driving finger
SDU :	Both sides double drive-stage type finger

③

Actuator Type	
T35 :	TULA35
T50 :	TULA50
T70 :	TULA70
T70W :	TULA70W

④

Stroke / Angle / Hollow dia	
03 :	3mm
04 :	4mm
10 :	10mm
15 :	15mm
25 :	25mm ※
060 :	60° (θstage)
120 :	120° (θstage)
180 :	180° (θstage)
240 :	240° (θstage)
360 :	360° (θstage)
H10 :	φ10.5mm
H20 :	φ22mm
H30 :	φ31mm

⑤

Resolution	
0 :	Open Type
1 :	5μm
2 :	0.005° (θstage)
5 :	1μm
6 :	0.5μm
7 :	0.1μm

※ Except hollow stage

Ultrasonic motor Stage Series

Standard Stage / Finger

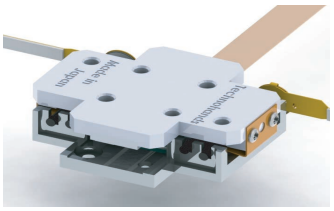
X axis Stage

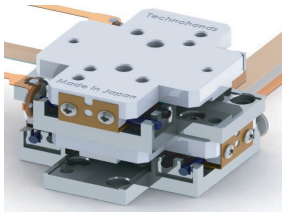
XY axes Stage

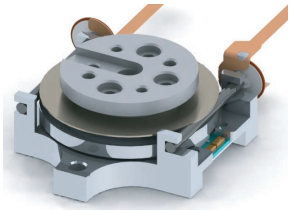
θ axis Stage

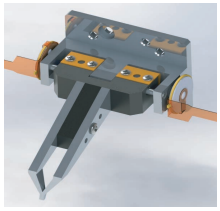
Finger Unit

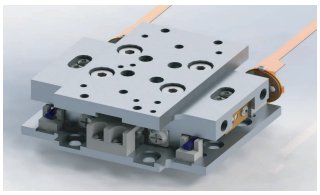
X axis Stage
with Cross roller guide

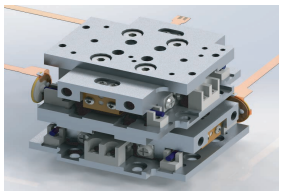
XY axes Stage
with Cross roller guide

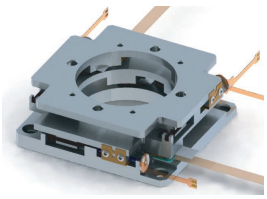
XY axes Hollow Stage

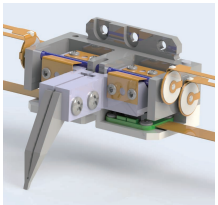
Finger Unit
with Encoder

Specifications

	X axis stage						X axis stage Cross roller guide		X stage Liner guide
TYPE	XDT35-04	XDT50-04	XDT70-10	XDT70-15	**XMDT50-05**	**XCTW70-255**	XCWT70-10	XCWT70-15	**XLGT70-15**
Stroke	4mm	4mm	10mm	15mm	5mm	25mm	10mm	15mm	15mm
Resolution	Open loop or 1pulse:0.1、0.5、1.0、5.0 μmm ※					Open or1.0、5.0μm※	Open loop or 1pulse:0.1、0.5、1.0、5.0 μmm ※		
Repeatability	±3pulses (Only with encoder)								
Thrust Power	40gf	70gf	70gf	60gf	60gf	50gf	80gf	70gf	
Holding Force	150gf	300gf			300gf		350gf		300gf
Maximum Speed	10mm/s								
Weight	8g	11g	13g	14g	5g	70g	30g	40g	23g

	XY axes stage			XY hollow stage	XY axes stage Cross roller guide	
TYPE	XYDT50-04	XYDT70-10	XYDT70-15	XYHDT50-04	XYCWT70-10	XYCWT70-15
Stroke	4mm	10mm	15mm	4mm	10mm	15mm
Resolution	Open loop or 1pulse:0.1、0.5、1.0、5.0μmm ※					
Repeatability	±3pulses (Only with encoder)					
Thrust Power	60gf	60gf	50gf	60gf	80gf	70gf
Holding Force	250g				350gf	
Maximum Speed	10mm/s				10mm/s	
Weight	22g	26g	28g	44g	60g	80g

	Finger Unit		
TYPE	FDUT50-03	FSDUT50-06	FLGUT70-03
Maximum opening time stroke	3 mm	6 mm	3 mm
Finger arm length	16.2mm	17.2mm	16.8mm
Resolution	Open loop or 0.1、0.5、1.0 μmm ※		
Repeatability	±3pulse (Only with encoder)		
Thrust Power	50gf		20gf
Holding power	150gf		70gf
Weight capacity	15g		10g
Weight	16g	25g	24.6g

	θ axis stage			θ axis hollow type		
TYPE	θDT50	θDT70	**θMDT50**	**θHDT70-H10**	**θHDT70-H20**	**θHDT70-H30**
Rotation Angle	20° /60° /90° /140° /180° /260° /300° /360° ※	60° /120° /180° /240° /360° ※		360°		
Hollow Diameter				φ10.5mm	φ22mm	φ31mm
Resolution	Open loop or1pulse:0.005° ※					
Repeatability	±3pulses (Only with encoder)					
Revolving Torque	40g・cm	50g・cm	40g・cm	50g・cm		
Holding Torque	130g・cm	150g・cm	150g・cm	150g・cm		
Weight	10g	19g	8g	15g	58g	70g

Operating Temp : +10～+50℃
Storage Temp : −10～+60℃
Humidity : 0～80%
(without dew condensation)

NOTE
・※ mark : Selection

Ultrasonic motor Stage Series

X axis Stage XDT35-045

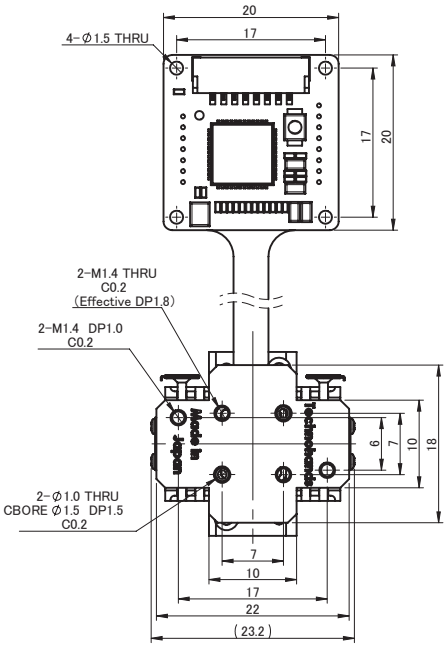

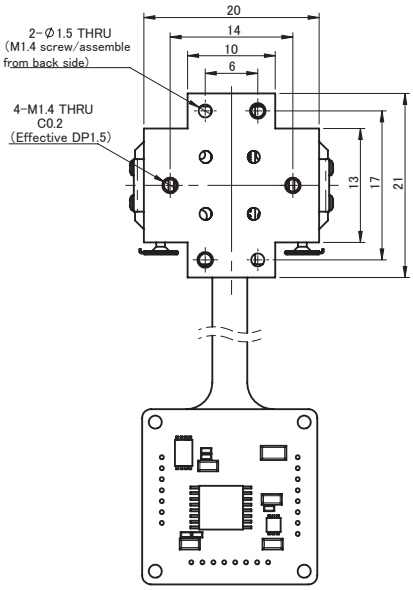

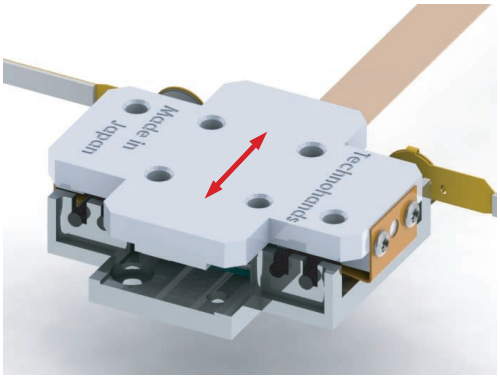

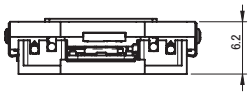

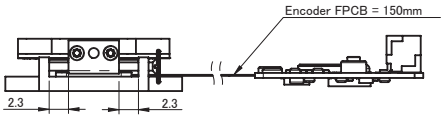

- Specifications -
1. Actuator type : TULA35 2pcs
2. Stroke : 4mm
3. Resolution : 1.0 μm
   Selection : 0.1、0.5、1.0、5.0 μm
4. Repeatability : ±3 pulses
When 0.1 μm resolution is selected
   : ± 5 pulses
5. Thrust Power : 40gf
6. Holding Force : 150gf
7. Weight : Approximately 8g
8. Table size : 18×22mm

X axis Stage XDT50-045

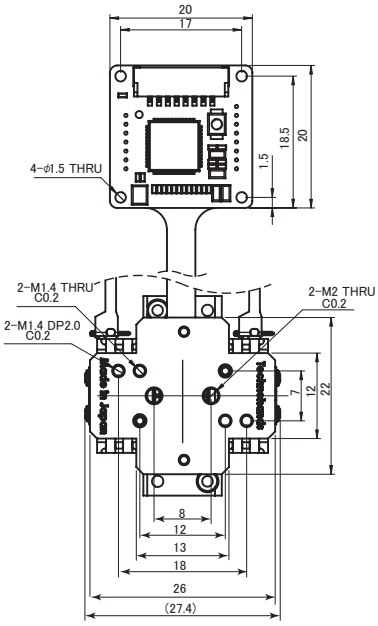

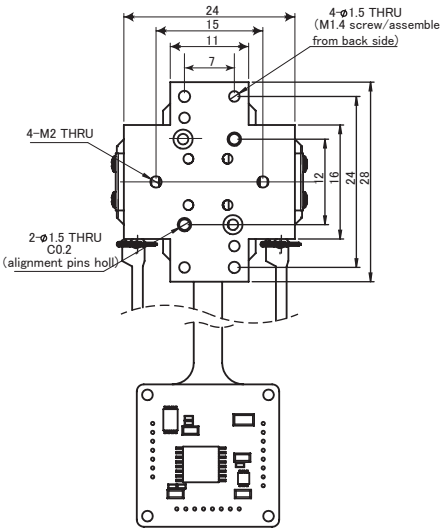

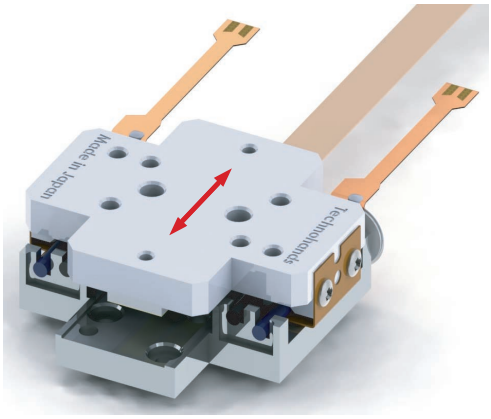

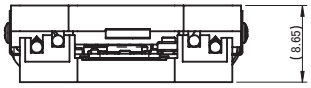

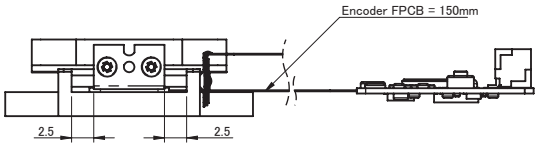

- Specifications -
1. Actuator type : TULA50 2pcs
2. Stroke : 4mm
3. Resolution : 1.0 μm
   Selection : 0.1、0.5、1.0、5.0 μm
4. Repeatability : ±3 pulses
When 0.1 μm resolution is selected
   : ± 5 pulses
5. Thrust Power : 70gf
6. Holding Force : 300gf
7. Weight : Approximately 11g
8. Table size : 22×26mm

Ultrasonic motor Stage Series

X axis Stage XDT70-105

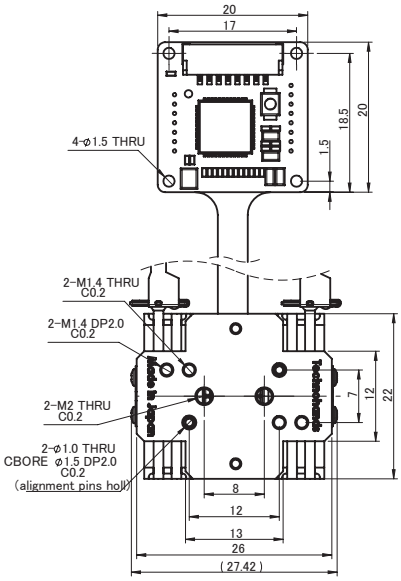

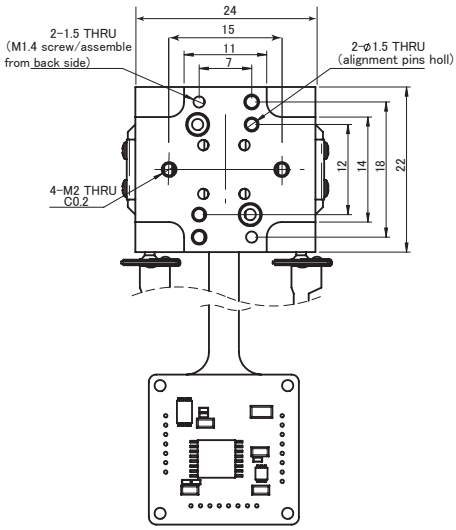

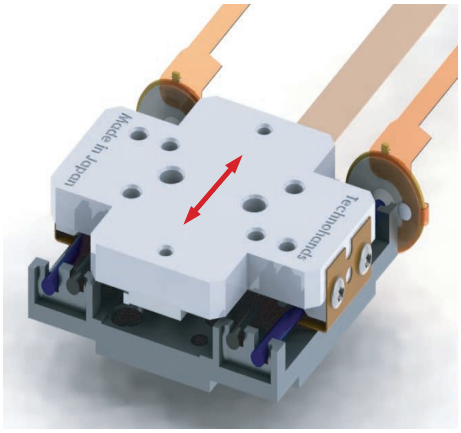

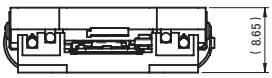

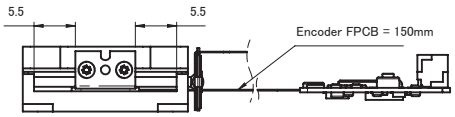

- Specifications -
1. Actuator type : TULA70 2pcs
2. Stroke : 10mm
3. Resolution : 1.0 μm
   Selection : 0.1、0.5、1.0、5.0 μm
4. Repeatability : ±3 pulses
When 0.1 μm resolution is selected
   : ± 5 pulses
5. Thrust Power : 70gf
6. Holding Force : 300gf
7. Weight : Approximately 13g
8. Table size : 22×26mm

X axis Stage XDT70-155

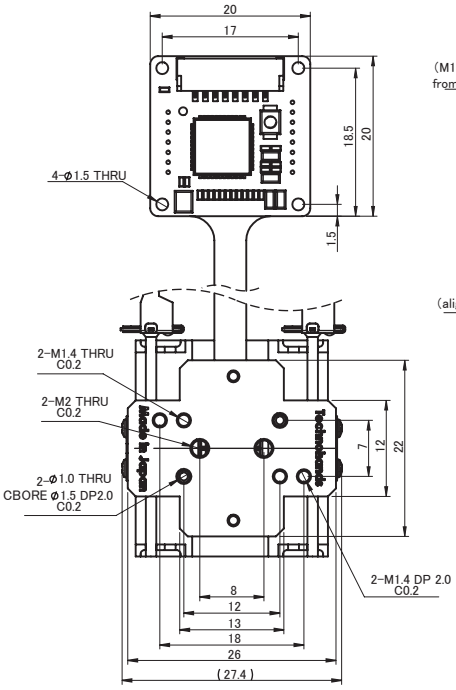

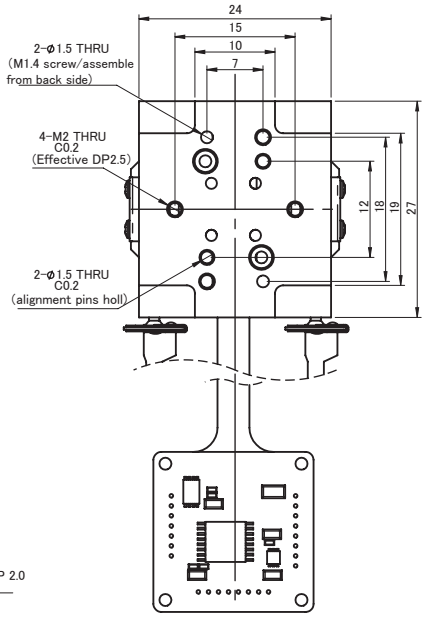

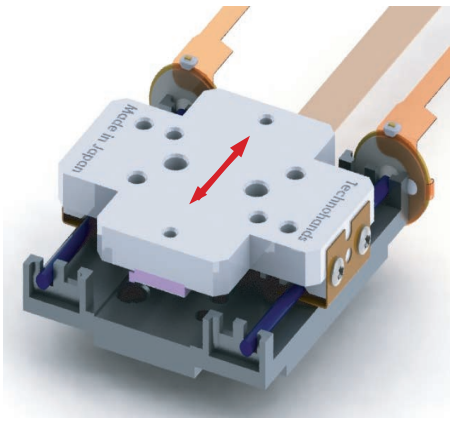

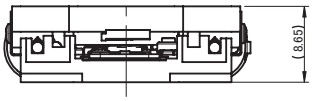

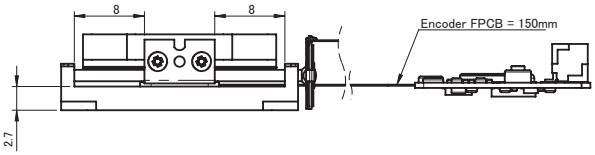

- Specifications -
1. Actuator type : TULA70 2pcs
2. Stroke : 15mm
3. Resolution : 1.0 μm
   Selection : 0.1、0.5、1.0、5.0 μm
4. Repeatability : ±3 pulses
When 0.1 μm resolution is selected
   : ± 5 pulses
5. Thrust Power : 60gf
6. Holding Force : 300gf
7. Weight : Approximately 14g
8. Table size : 22×26mm

Ultrasonic motor Stage Series

X axis Stage (Cross roller guide type) XCWT70-105

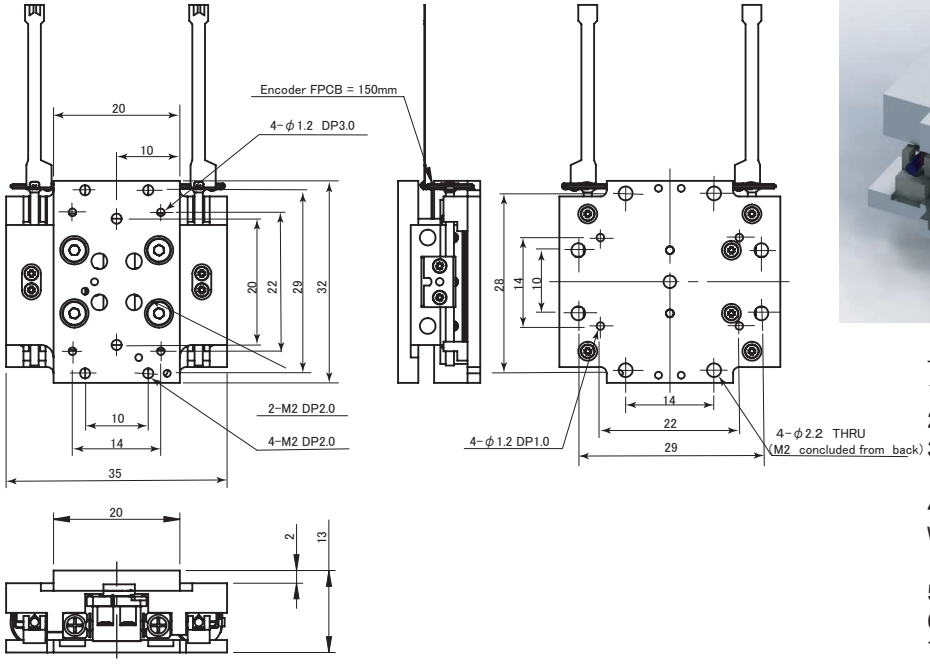

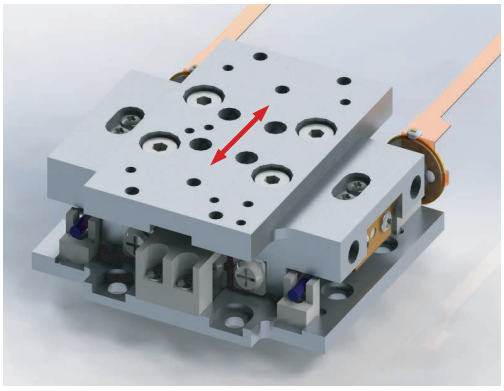

- Specifications -
1. Actuator type : TULA70 2pcs
2. Stroke : 10mm
3. Resolution : 1.0 μm
   Selection : 0.1、0.5、1.0、5.0 μm
4. Repeatability : ±3 pulses
   When 0.1 μm resolution is selected
   : ± 5 pulses
5. Thrust Power : 80gf
6. Holding Force : 350gf
7. Weight : Approximately 30g
8. Table size : 20×32mm

X axis Stage (Cross roller guide type) XCWT70-155

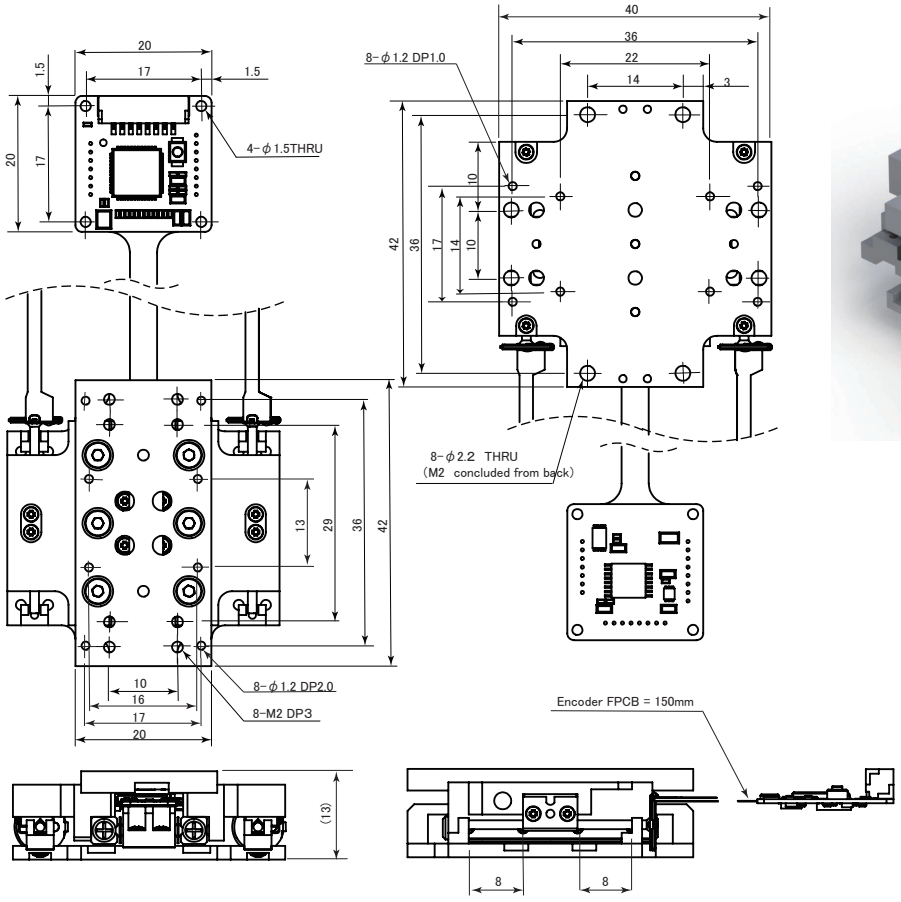

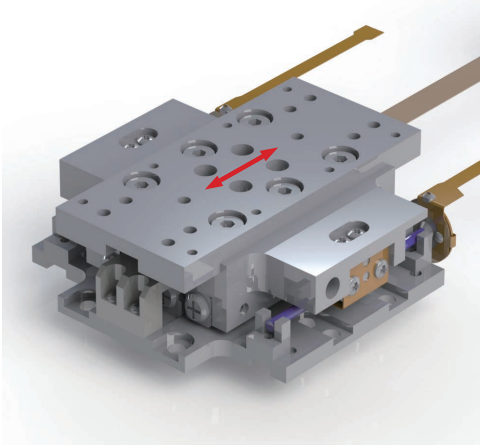

- Specifications -
1. Actuator type : TULA70 2pcs
2. Stroke : 15mm
3. Resolution : 1.0 μm
   Selection : 0.1、0.5、1.0、5.0 μm
4. Repeatability : ±3 pulses
   When 0.1 μm resolution is selected
   : ± 5 pulses
5. Thrust Power : 70gf
6. Holding Force : 350gf
7. Weight : Approximately 40g
8. Table size : 20×42mm

Ultrasonic motor Stage Series

XY axis Stage XYDT50-045

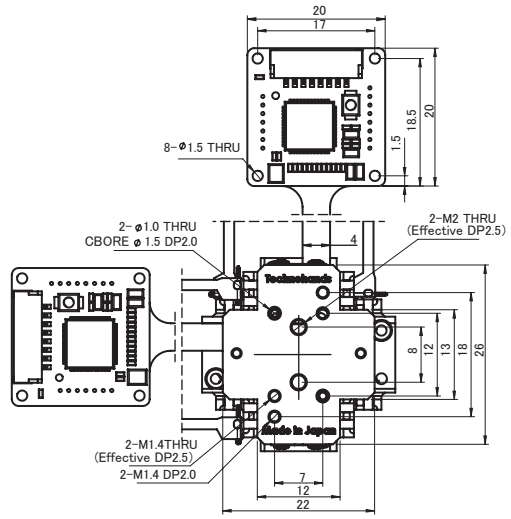

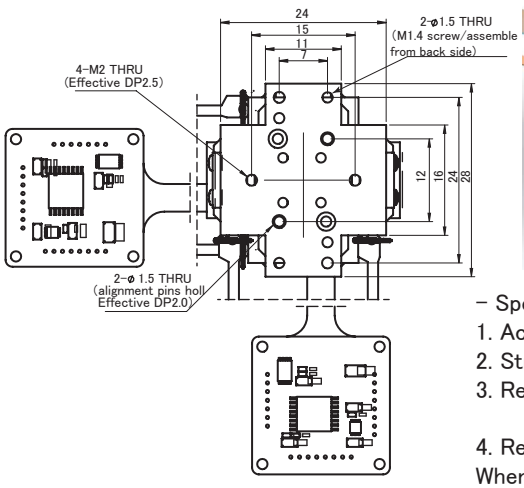

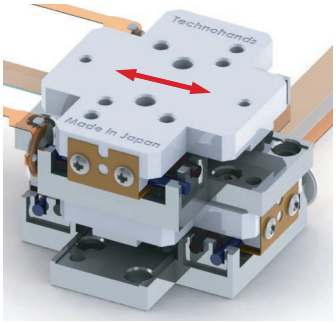

- Specifications -

1. Actuator type : TULA50 4pcs
2. Stroke : 4mm
3. Resolution : 1.0 μm
   Selection :0.1、0.5、1.0、5.0 μm
4. Repeatability : ±3 pulses
   When 0.1 μm resolution is selected
   : ± 5 pulses
5. Thrust Power : 60gf
6. Holding Force : 250gf
7. Weight : Approximately 22g
8. Table size : 22×26mm

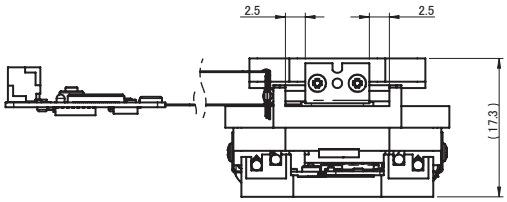

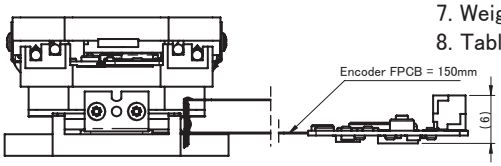

XY axis Stage XYDT70-105

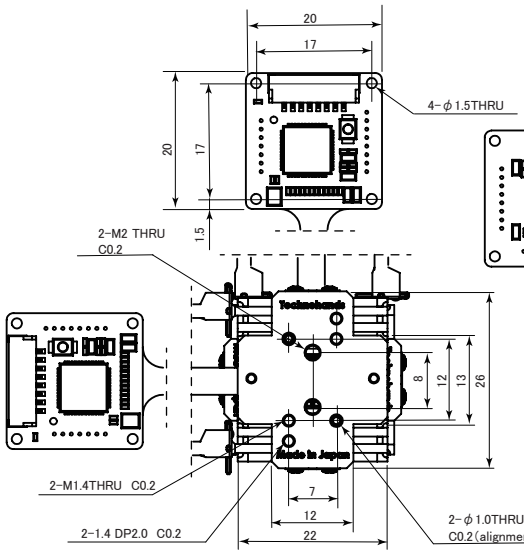

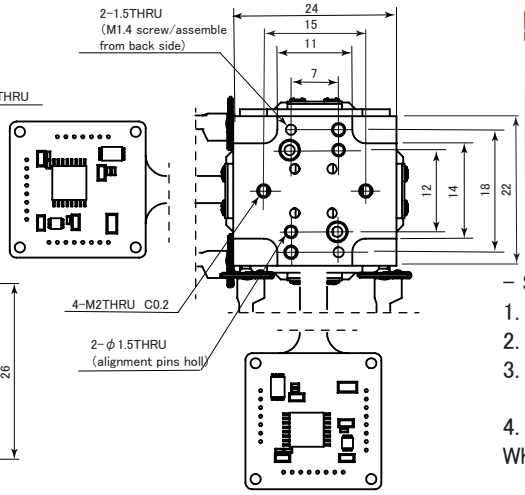

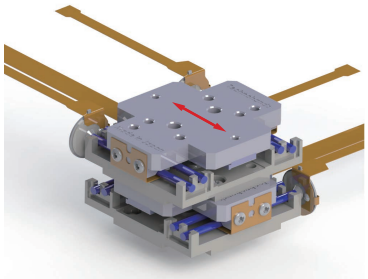

- Specifications -

1. Actuator type : TULA70 4pcs
2. Stroke : 10mm
3. Resolution : 1.0 μm
   Selection :0.1、0.5、1.0、5.0 μm
4. Repeatability : ±3 pulses
   When 0.1 μm resolution is selected
   : ± 5 pulses
5. Thrust Power : 60gf
6. Holding Force : 250gf
7. Weight : Approximately 26g
8. Table size : 22×26mm

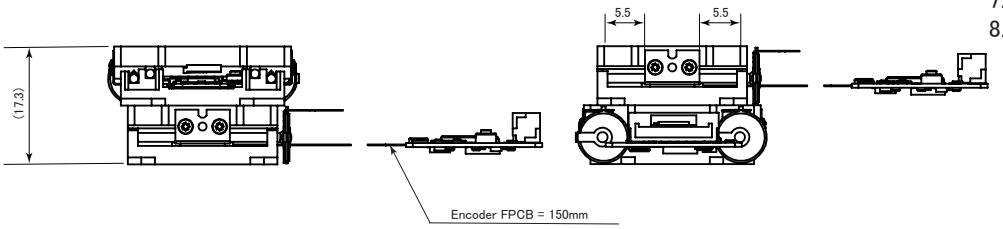

Ultrasonic motor Stage Series

XY axis Stage XYDT70-155

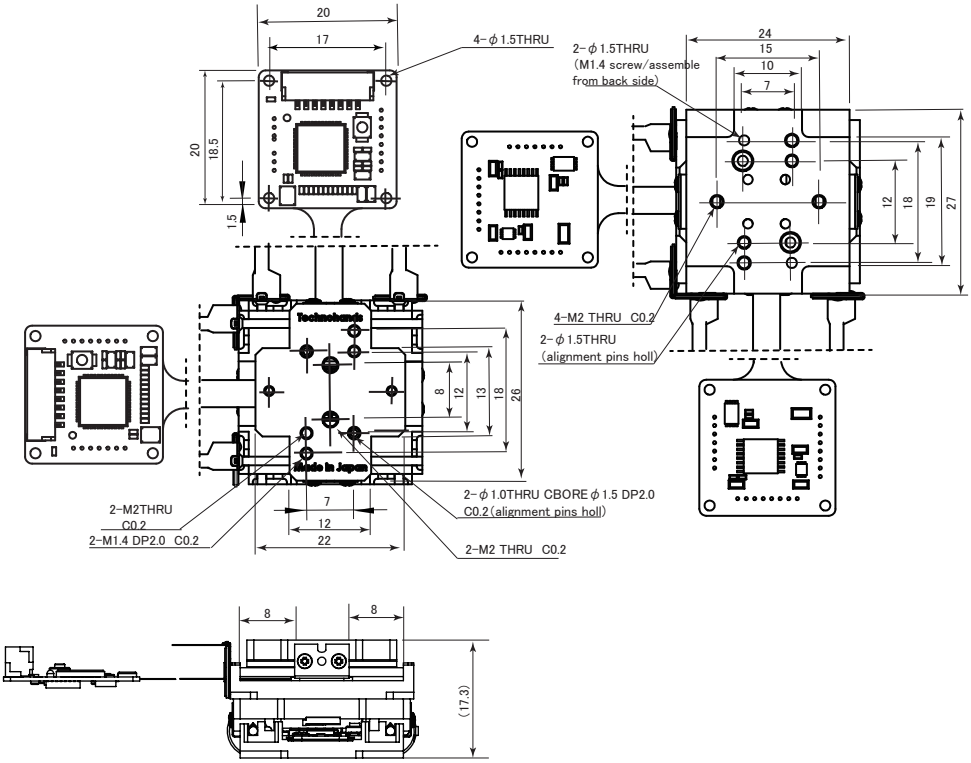

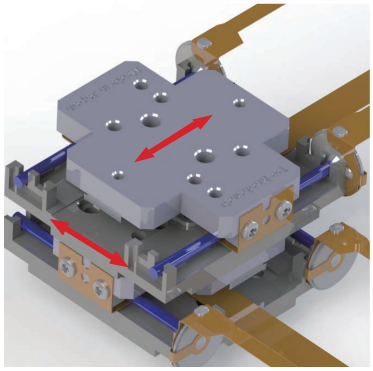

- Specifications -
1. Actuator type : TULA70 4pcs
2. Stroke : 15mm
3. Resolution : 1.0 μm
   Selection :0.1、0.5、1.0、5.0 μm
4. Repeatability : ±3 pulses
When 0.1 μm resolution is selected
   : ± 5 pulses
5. Thrust Power : 50gf
6. Holding Force : 250gf
7. Weight : Approximately 28g
8. Table size : 22×26mm

XY axis Stage (Hollow type) XYHDT50-045

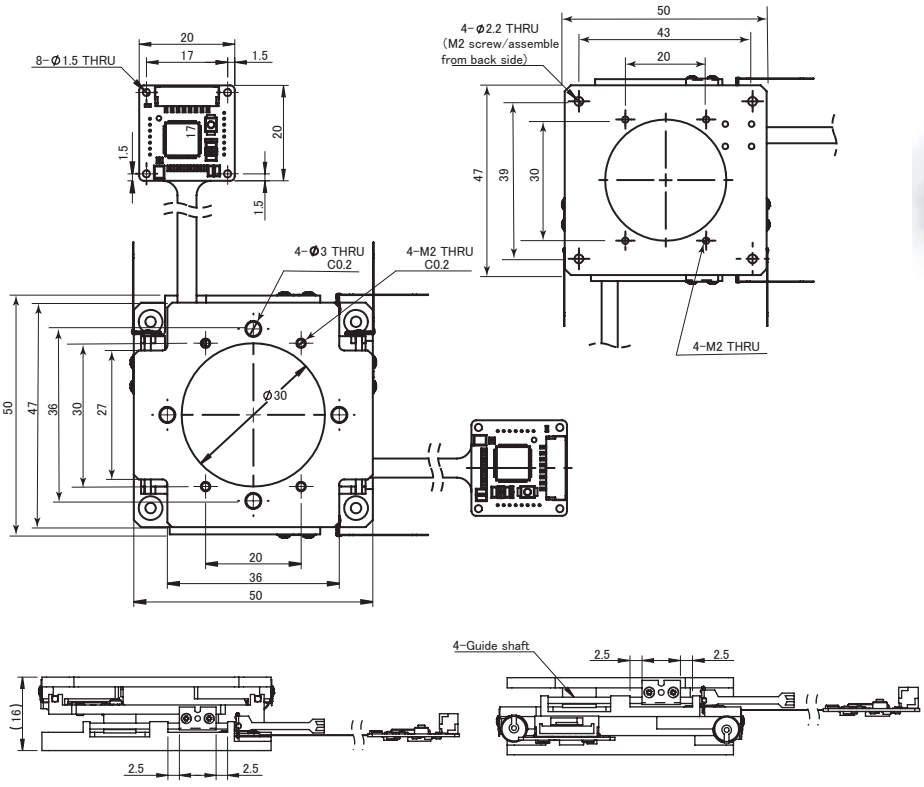

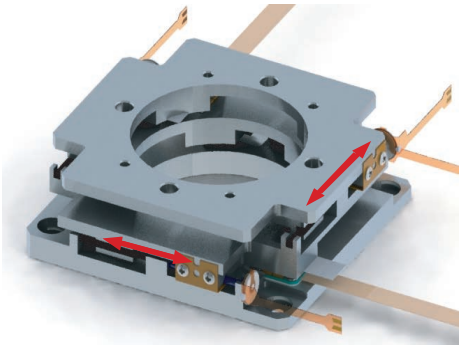

- Specifications -
1. Actuator type : TULA50 4pcs
2. Stroke : 4mm
3. Resolution : 1.0 μm
   Selection :0.1、0.5、1.0、5.0 μm
4. Repeatability : ±3 pulses
When 0.1 μm resolution is selected
   : ± 5 pulses
5. Thrust Power : 60gf
6. Holding Force : 250gf
7. Weight : Approximately 44g
8. Table size : 47×50mm
9. Effective hollow dia : φ23

Ultrasonic motor Stage Series

XY axis Stage (Cross roller guide type) XYCWT70-105

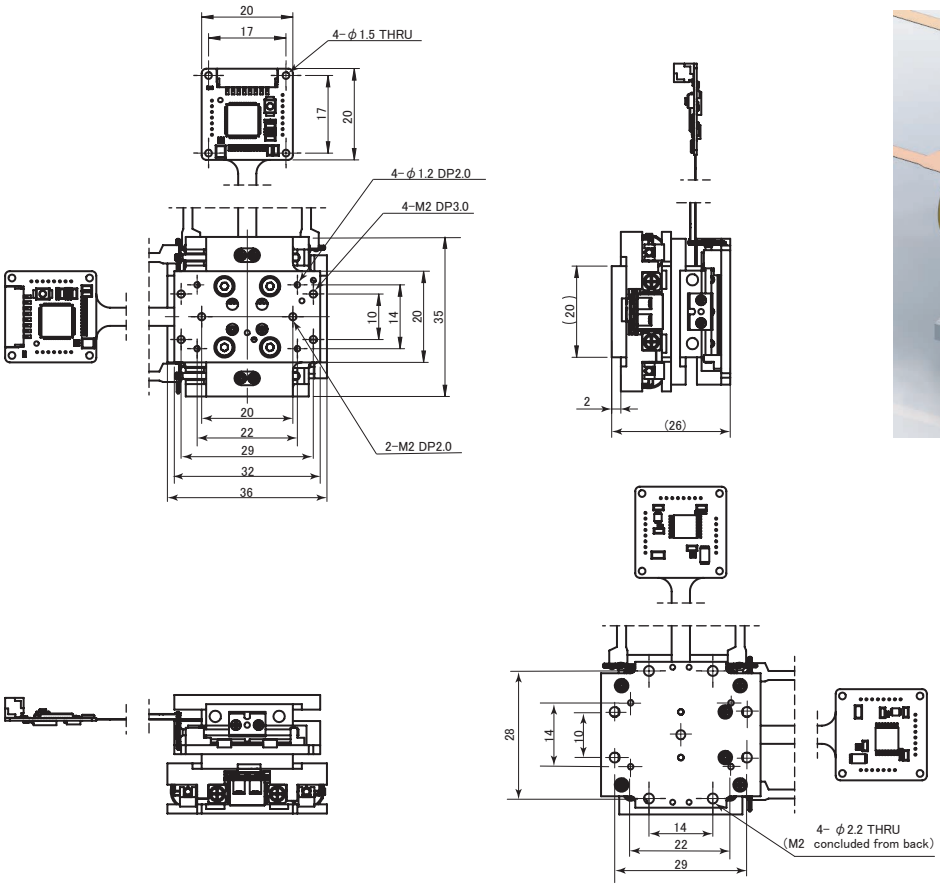

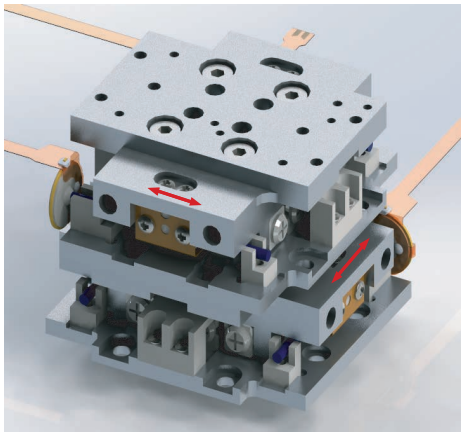

- Specifications -
1. Actuator type : TULA70 4pcs
2. Stroke : 10mm
3. Resolution : 1.0 μm
   Selection : 0.1、0.5、1.0、5.0 μm
4. Repeatability : ±3 pulses
   When 0.1 μm resolution is selected
   : ± 5 pulses
5. Thrust Power : 80gf
6. Holding Force : 350gf
7. Weight : Approximately 60g
8. Table size : 20×32mm

XY axis Stage (Cross roller guide type) XYCWT70-155

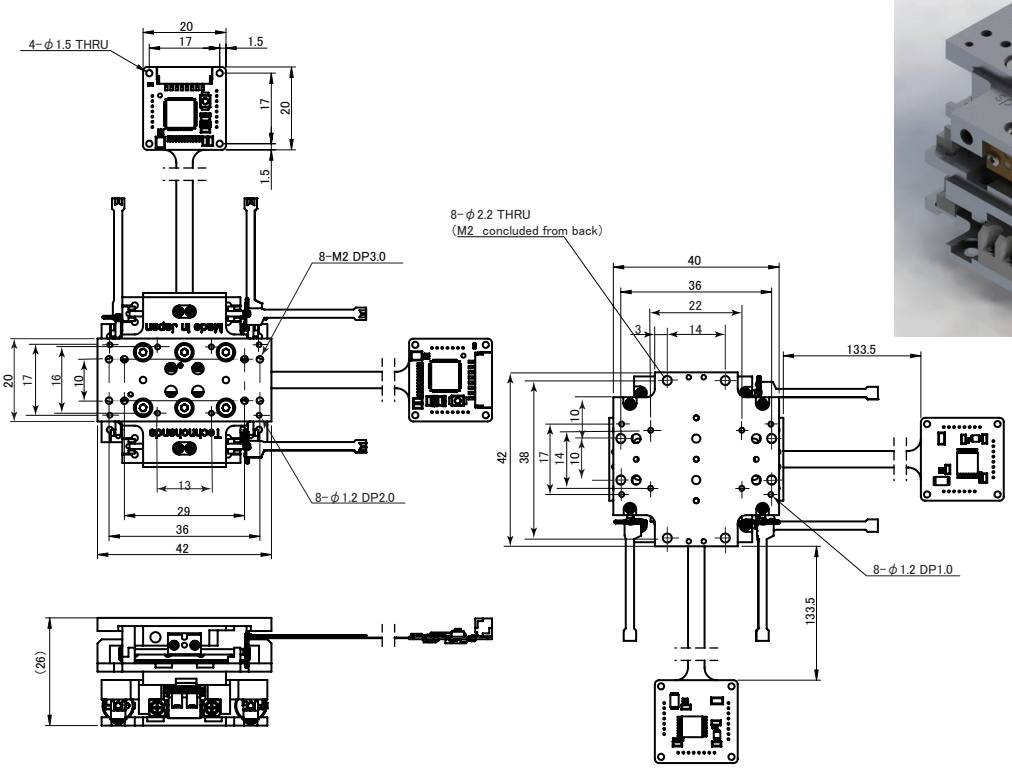

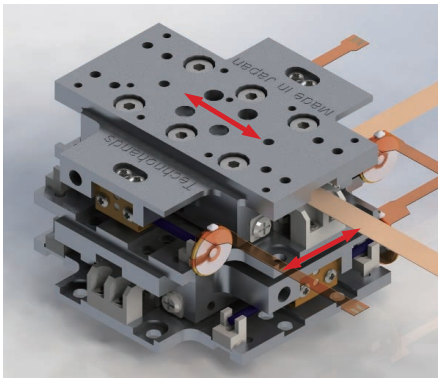

- Specifications -
1. Actuator type :
   TULA70 4pcs
2. Stroke : 15mm
3. Resolution : 1.0 μm
   Selection : 0.1、0.5、1.0
   and 5.0 μm
4. Repeatability : ±3 pulses
   When 0.1 μm resolution
   is selected : ± 5 pulses
5. Thrust Power : 70gf
6. Holding Force : 350gf
7. Weight : Approximately 80g
8. Table size : 20×42mm

Ultrasonic motor Stage Series

X axis Stage (Mini type) XMDT50-057

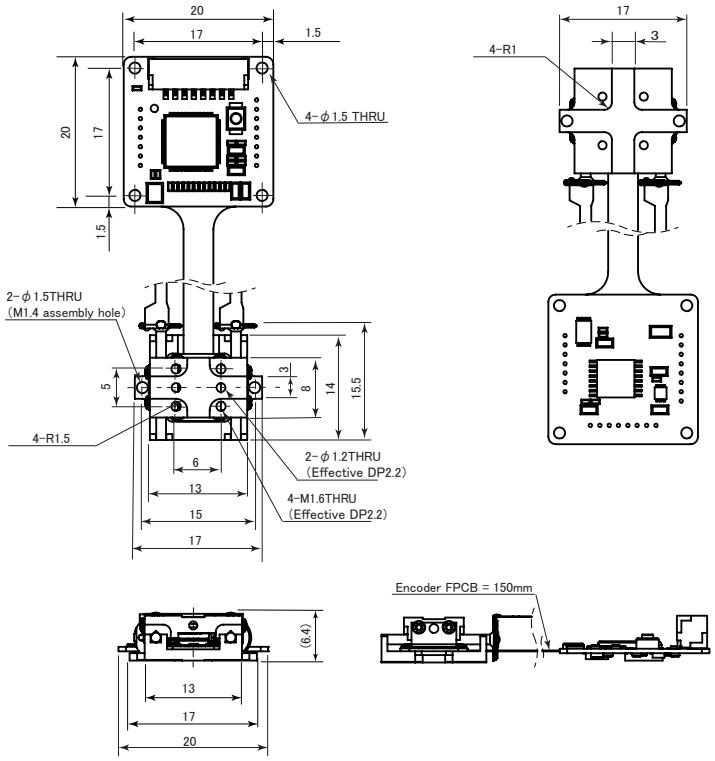

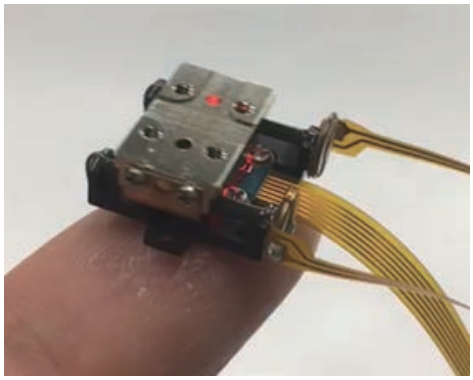

- Specifications -
1. Actuator type : TULA50 2pcs
2. Stroke : ±2.5mm
3. Resolution : 0.1 μm
   Selection :0.1、0.5、1.0、5.0 μm
4. Repeatability : ±0.5 pulses
   With resolution of 0.5 μm, 1.0 μm, 5.0 μm
   : ± 3 pulses
5. Thrust Power : 60gf
6. Holding Force : 300～350gf
7. Weight : Approximately 5g
8. Table size : 8×13mm

X axis Stage (Linear guide type) XLGT70-157

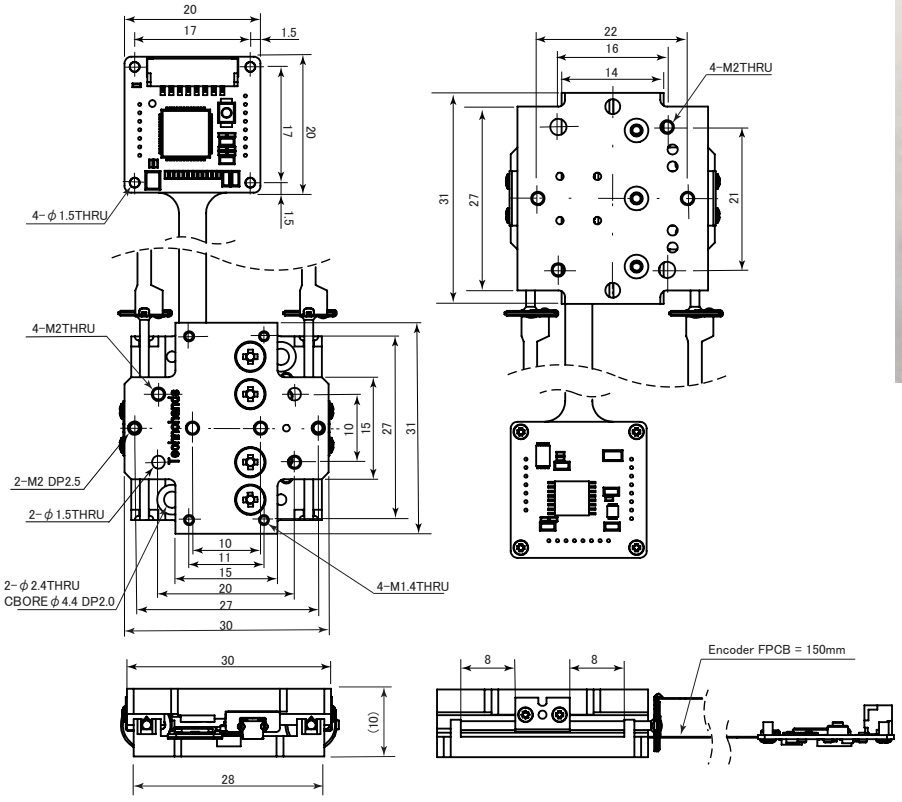

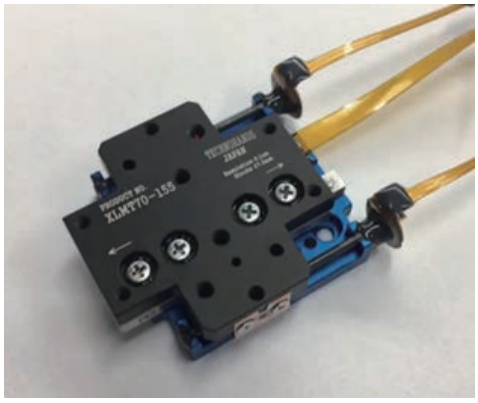

- Specifications -
1. Actuator type : TULA70 2pcs
2. Stroke : ±7.5mm
3. Resolution : 0.1 μm
   Selection :0.1、0.5、1.0、5.0 μm
4. Repeatability : ±0.5 pulses
   With resolution of 0.5 μm, 1.0 μm, 5.0 μm
   : ± 3 pulses
5. Thrust Power : 70gf
6. Holding Force : 300～350gf
7. Weight : Approximately 23g
8. Table size : 30×31mm

Ultrasonic motor Stage Series

X axis Stage (Cross roller guide type) XCTW70-255

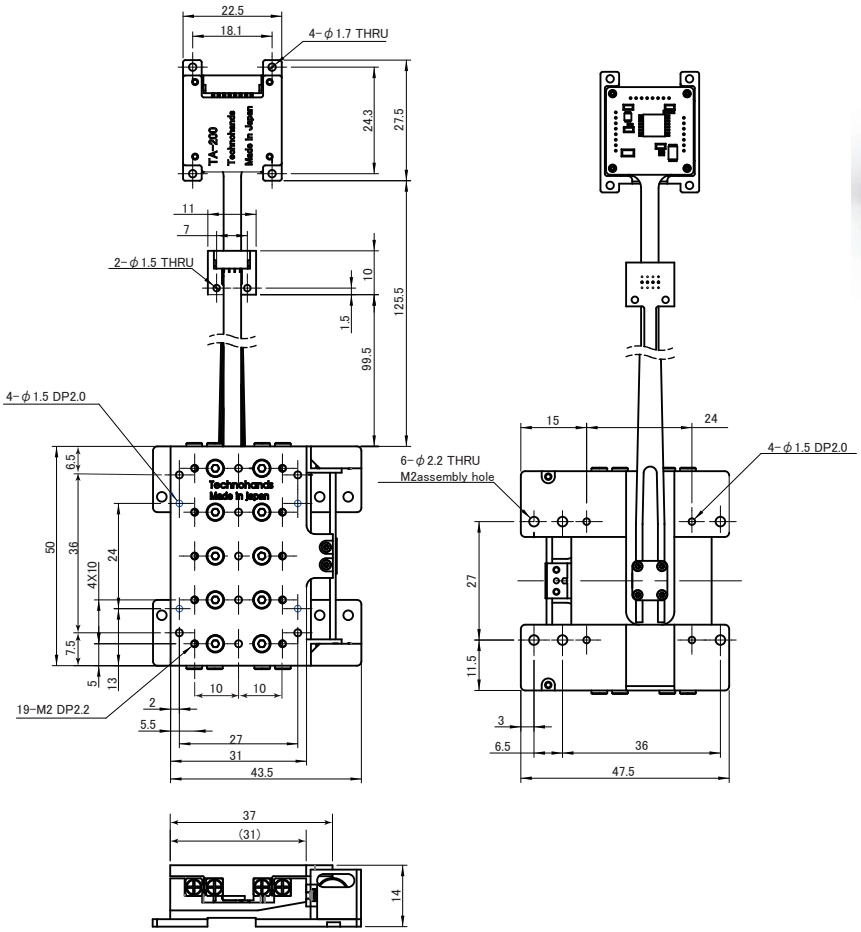

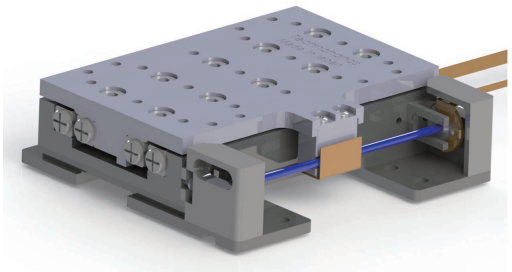

- Specifications -
1. Actuator type : TULA70W 1pc
2. Stroke : ±12.5mm
3. Resolution : 1.0μm
   Selection : 1.0、5.0μm
4. Repeatability : ±3 pulses
5. Thrust Power : 50gf
6. Holding Force : 300gf
7. Weight : Approximately 70g
8. Table size : 31×50mm

Application with the TULA unit

※ Optical Cage System

It's possible to make the optical system to the biggest φ1/2 in using TULA Serise.
An alignment adjustment is made of the precision of the sub-micron.

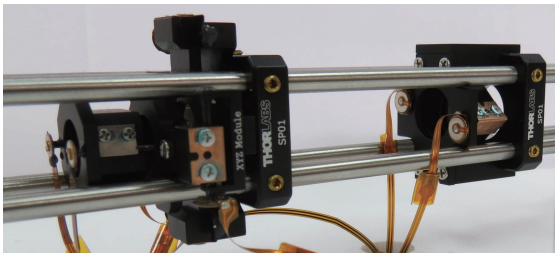

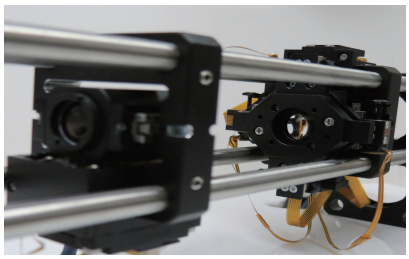

※ Autofocus for Optical system

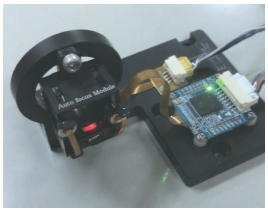

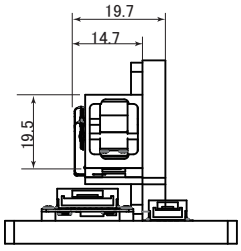

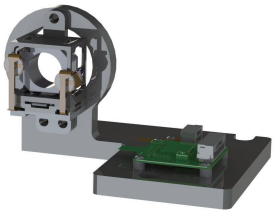

Stroke : ±2mm

※※ We'll handle design and manufacture of the unit you want.

Ultrasonic motor Stage Series

θ axis Stage θ DT50-1802

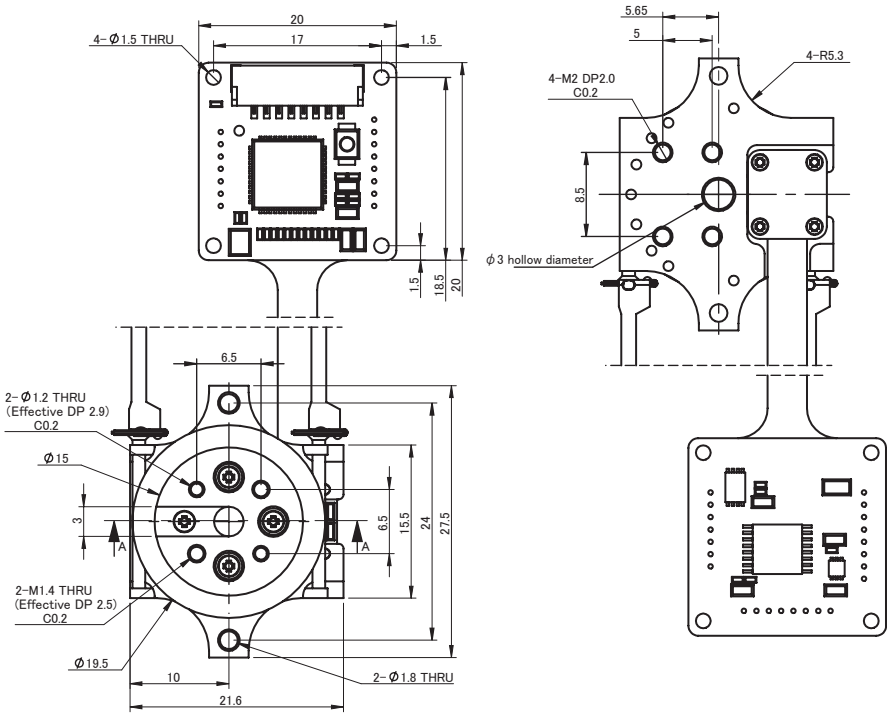

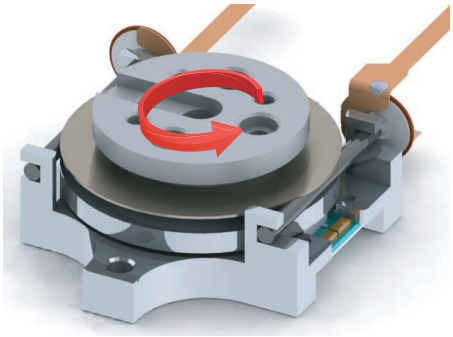

- Specifications -
1. Actuator type : TULA50 2pcs
2. Stroke : 180°
   Selection : 20、60、90、140、180、260、300 and 360°
3. Resolution : 0.005° /pluse
4. Repeatability : ±0.015
5. Thrust Power : 40gf·cm
6. Holding Force : 130gf·cm
7. Weight : Approximately 10g
8. Table size : ϕ15mm

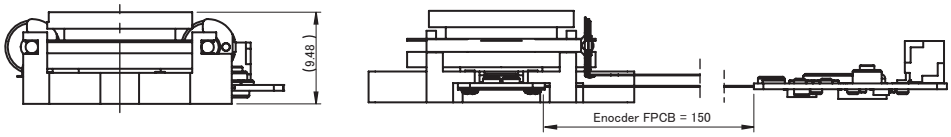

θ axis Stage θ DT70-1802

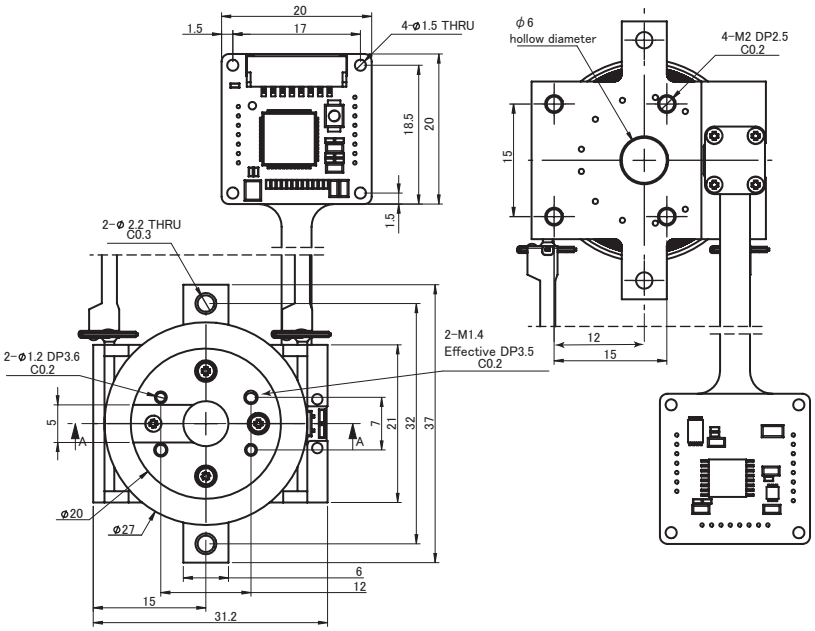

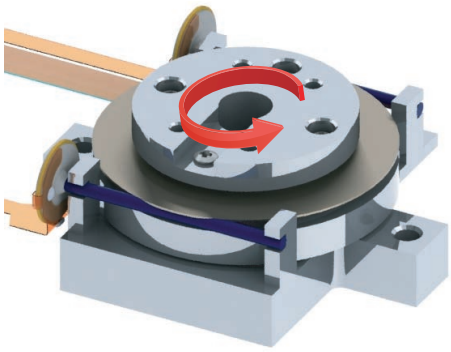

- Specifications -
1. Actuator type : TULA70 2pcs
2. Stroke : 180°
   Selection : 20、60、90、140、180、260、300 and 360°
3. Resolution : 0.005° /pluse
4. Repeatability : ±0.015
5. Thrust Power : 50gf·cm
6. Holding Force : 150gf·cm
7. Weight : Approximately 19g
8. Table size : ϕ20mm

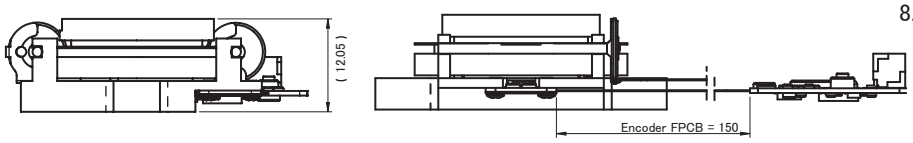

Ultrasonic motor Stage Series

θ axis Stage (Mini type) θ MDT50-1802

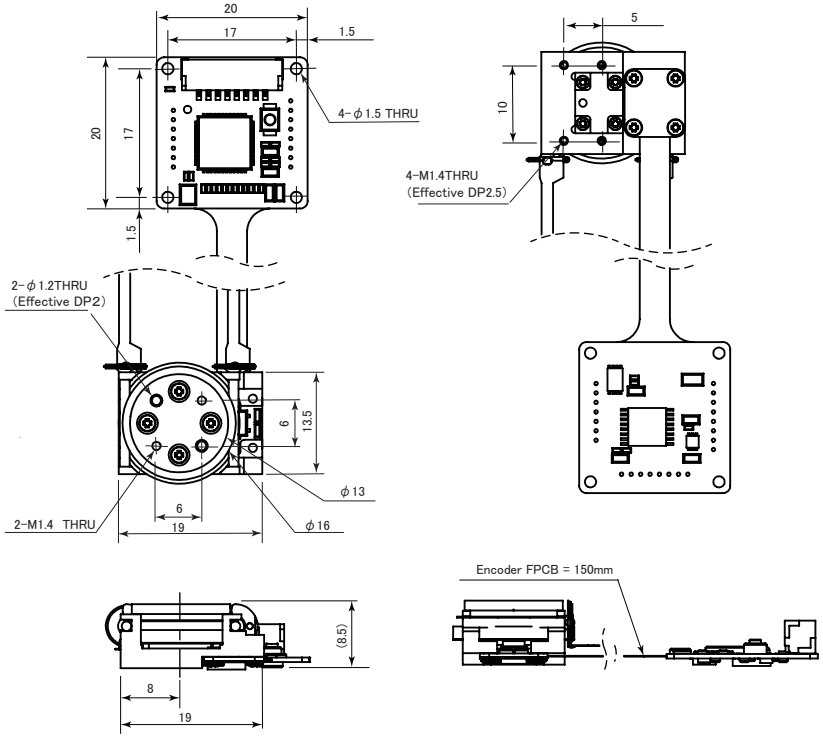

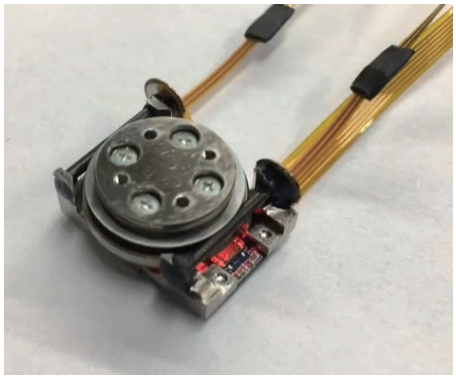

- Specifications -
1. Actuator type : TULA50 2pcs
2. Stroke : 180° (±90°)
   Selection :60、120、180、240、360°
3. Resolution : 0.005° /pluse
4. Repeatability : ±0.015
5. Thrust Power : 40gf・cm
6. Holding Force : 150gf・cm
7. Weight : Approximately 8g
8. Table size : φ13mm

θ axis Stage (Hollow type) θ HDT70-H102

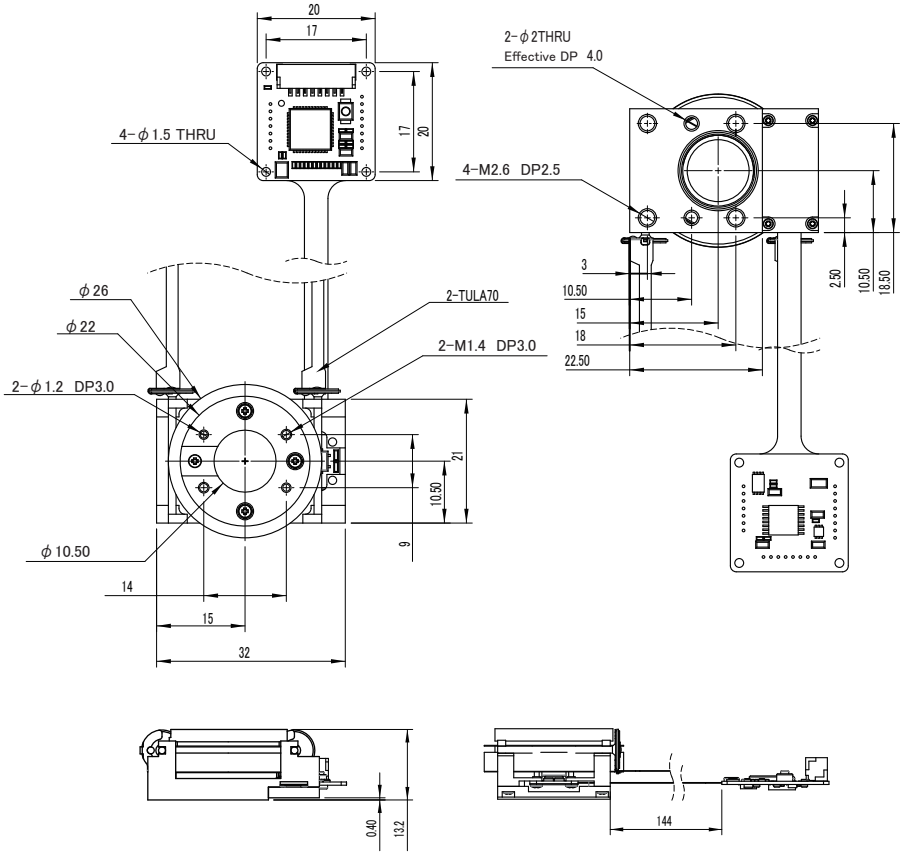

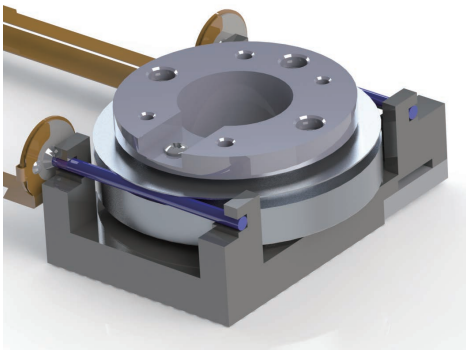

- Specifications -
1. Actuator type : TULA70 2pcs
2. Stroke : 360° (±180°)
3. Resolution : 0.005° /pluse
4. Repeatability : ±0.015
5. Thrust Power : 50gf・cm
6. Holding Force : 150gf・cm
7. Weight : Approximately 15g
8. Table size : φ22mm
9. Hollow size : φ10.5mm

Ultrasonic motor Stage Series

θ axis Stage (Hollow type) θ HDT70-H202

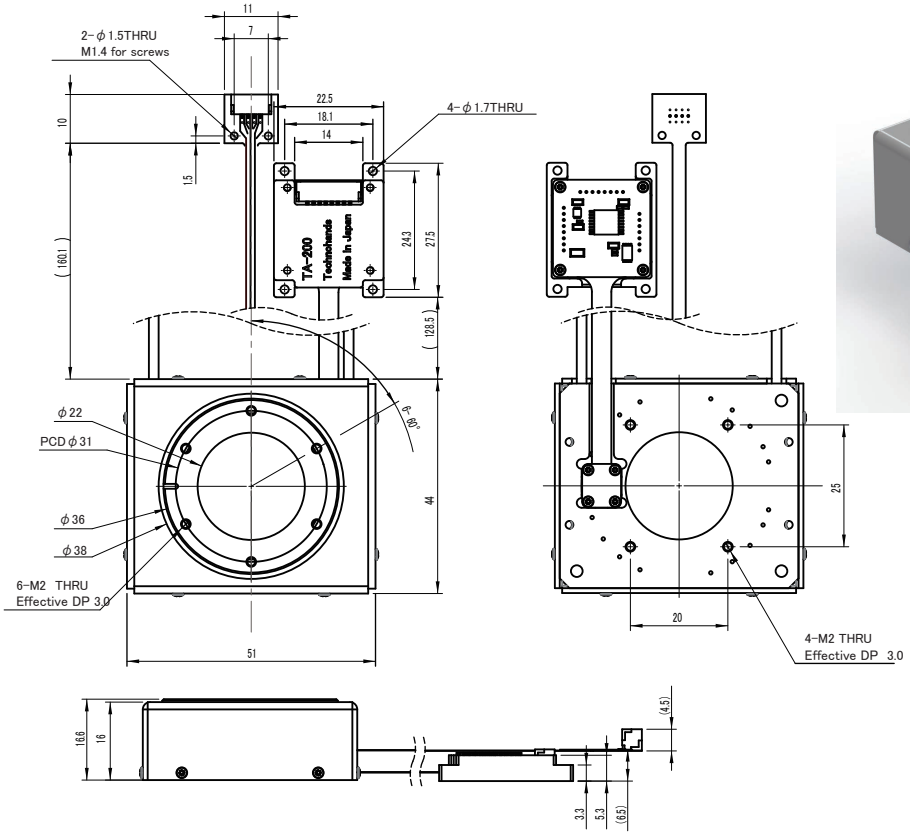

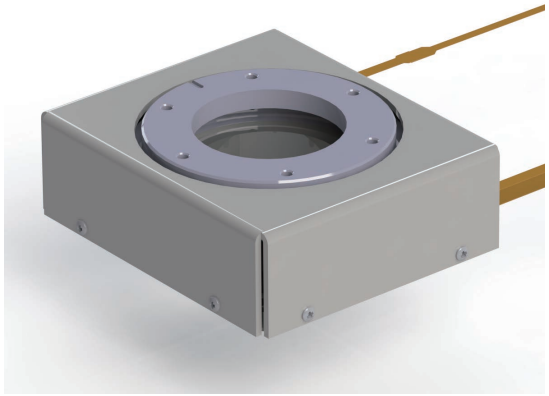

- Specifications -
1. Actuator type : TULA70 2pcs
2. Stroke : 360° (±180°)
3. Resolution : 0.005° /pluse
4. Repeatability : ±0.015
5. Thrust Power : 50gf･cm
6. Holding Force : 150gf･cm
7. Weight : Approximately 58g
8. Table size : φ36mm
9. Hollow size : φ22mm

θ axis Stage (Hollow type) θ HDT70-H302

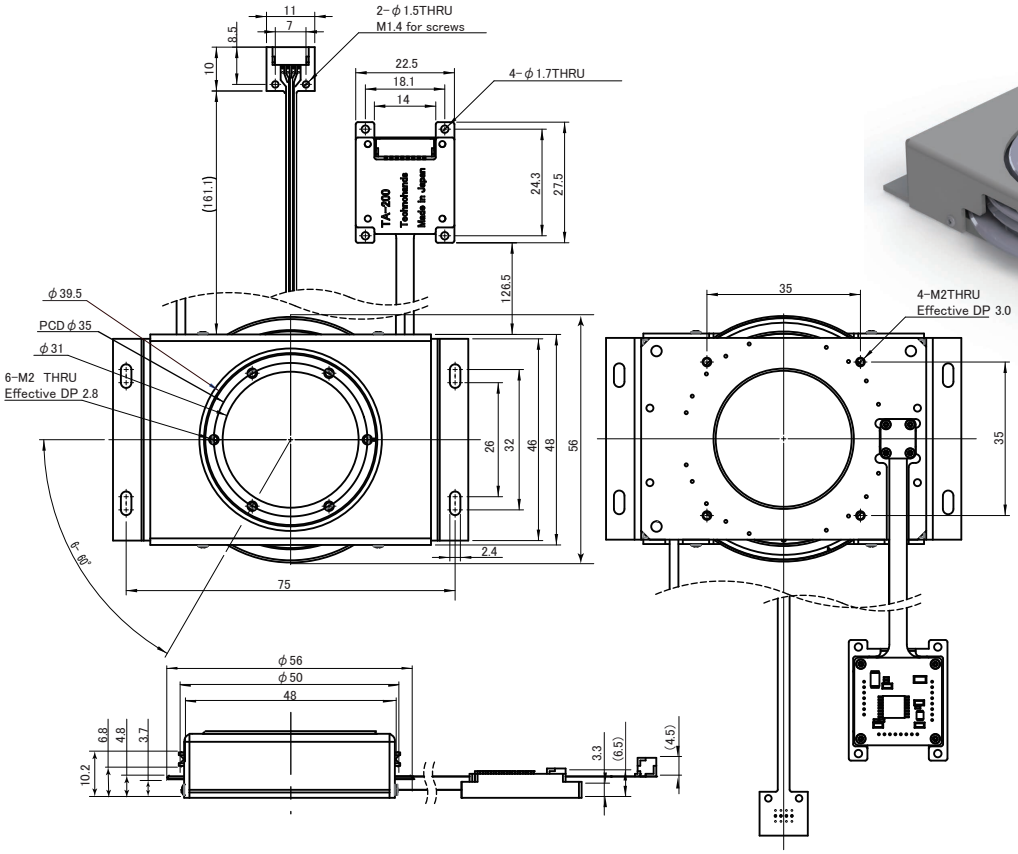

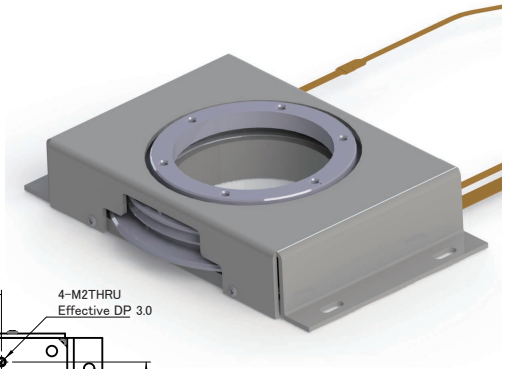

- Specifications -
1. Actuator type : TULA70 2pcs
2. Stroke : 360° (±180°)
3. Resolution : 0.005° /pluse
4. Repeatability : ±0.015
5. Thrust Power : 50gf･cm
6. Holding Force : 150gf･cm
7. Weight : Approximately 58g
8. Table size : φ39.5mm
9. Hollow size : φ31mm

Ultrasonic motor Stage Series・Customization

XYZaxes Stage (Cross roller guide type) XYZCWT70-105

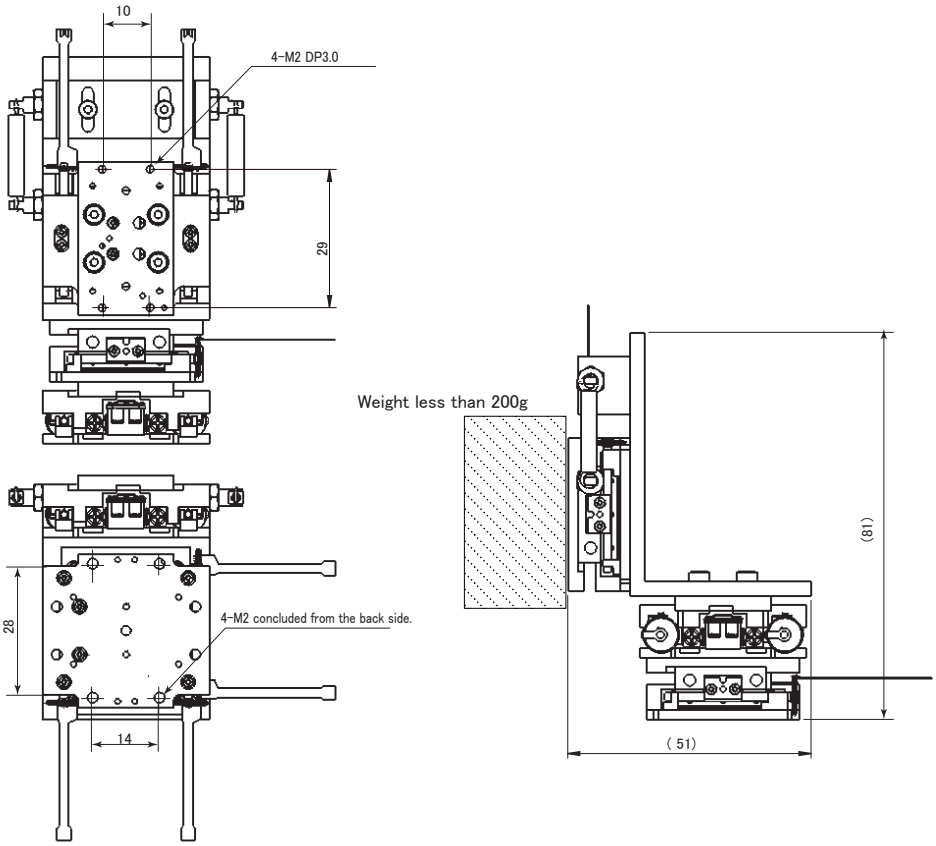

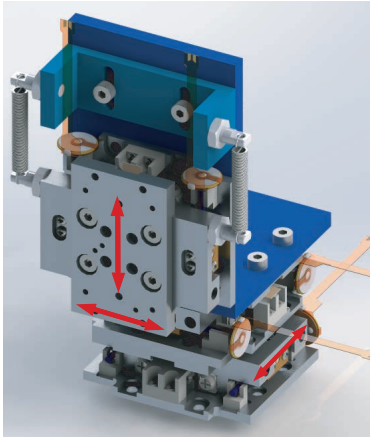

- Specifications -
1. Actuator type : TULA70 6pcs
2. Stroke : 10mm (±5mm)
3. Resolution : 1.0 μm
4. Repeatability : ±3 pulses
5. Thrust Power : 80gf
6. Holding Force : 350gf

XYθ axes Stage XYDT50-04/θDT70-060

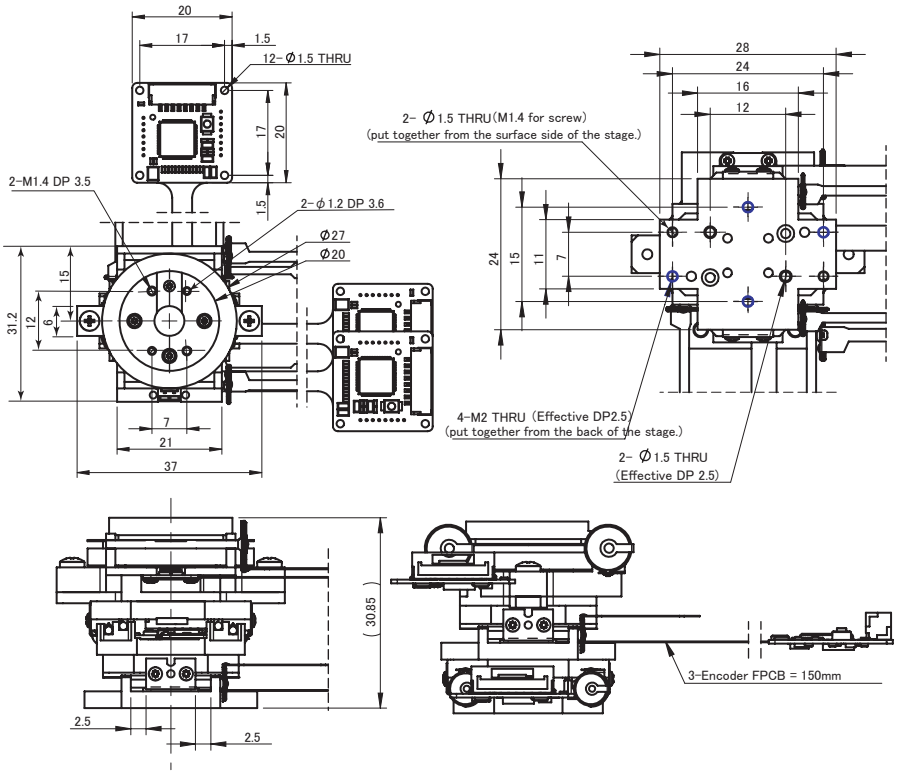

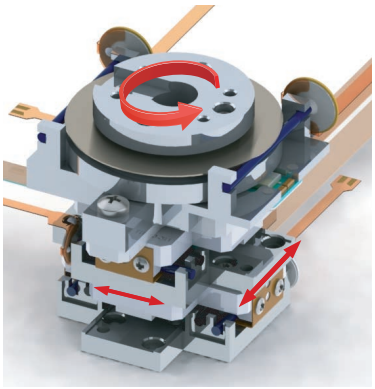

- Specifications -
1. Actuator type : TULA50 4pcs
   TULA70 2pcs
2. Stroke : XY = 4mm, θ = 60°
3. Resolution : X = 1 μm/pulses
   θ = 0.005° /pluses
4. Repeatability : ±3/pulses
5. Thrust Power : 60gf、50g・cm
6. Holding Force : 250gf、150gf・cm

Ultrasonic motor Stage Series・Customization

XYZ axes Stage XYZDT70-045

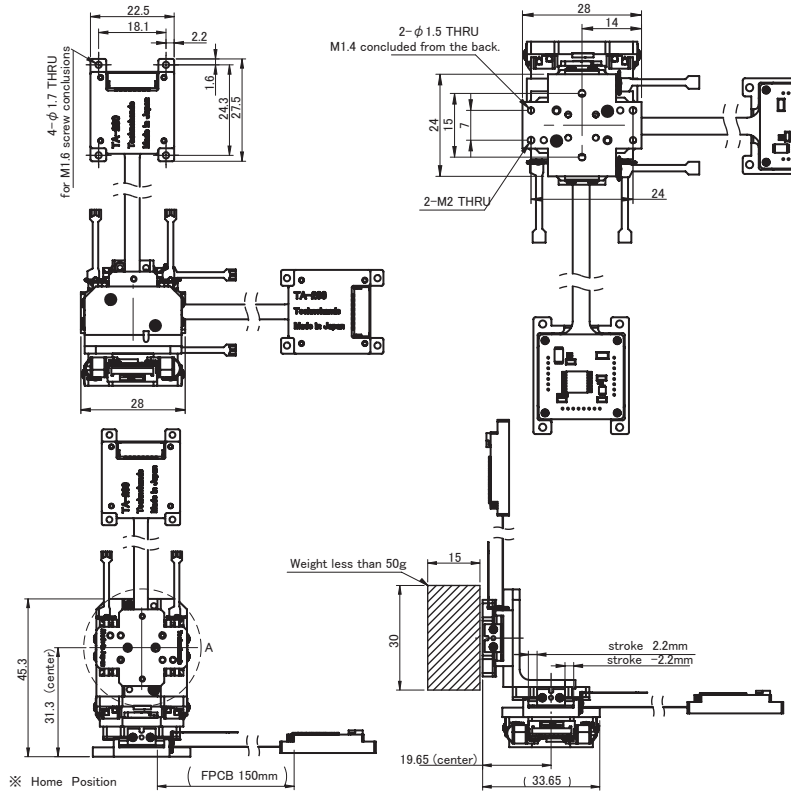

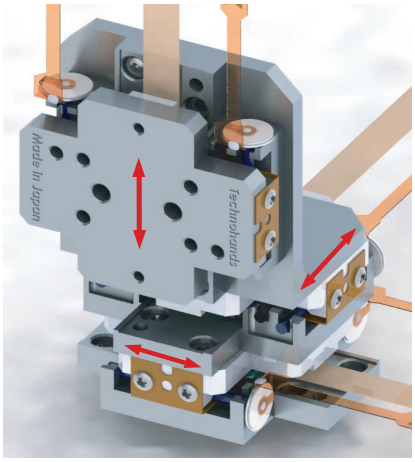

- Specifications -
1. Actuator type : TULA70 6pcs
2. Stroke : 4mm
3. Resolution : 1.0 μm
4. Repeatability : ±3 pulses
5. Thrust Power : 50gf
6. Holding Force : 300gf

Z axis Stage(Cross roller guide) & XY axis Stage(Hollow) XCYZHDT50-045

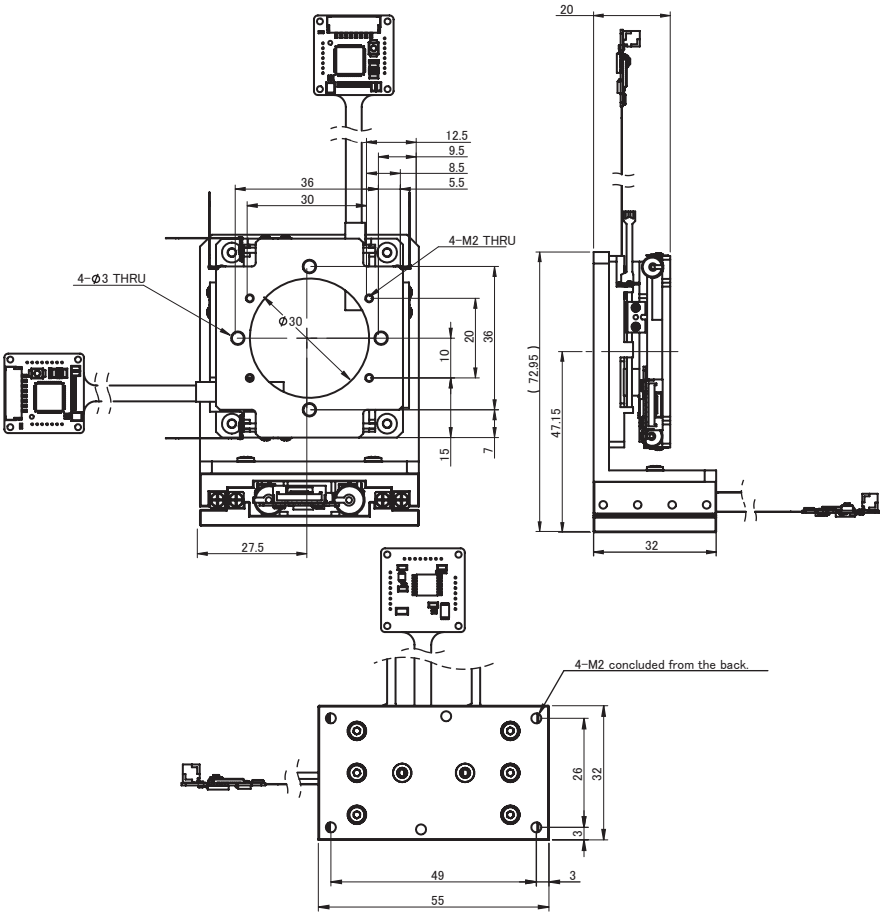

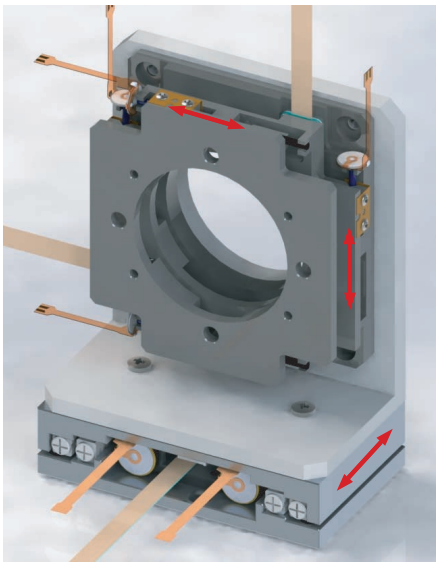

- Specifications -
1. Actuator type : TULA70 6pcs
2. Stroke : 4mm
3. Resolution : 1.0 μm
4. Repeatability : ±3 pulses
5. Thrust Power : 50gf
6. Holding Force : 350gf

Ultrasonic motor ･Finger Series

Finger Unit　FDUT50-030

Two TULA 50 are used on each side, and fingers with increased gripping force

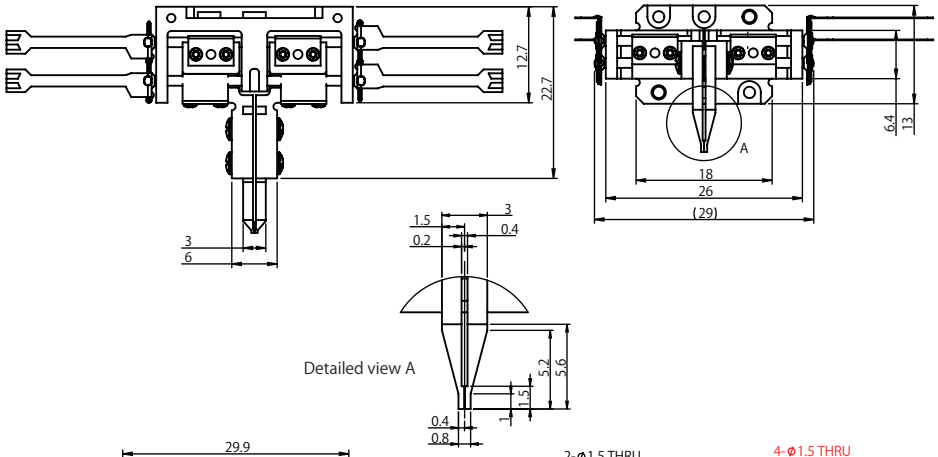

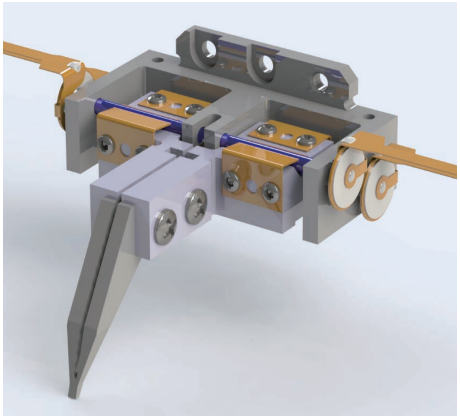

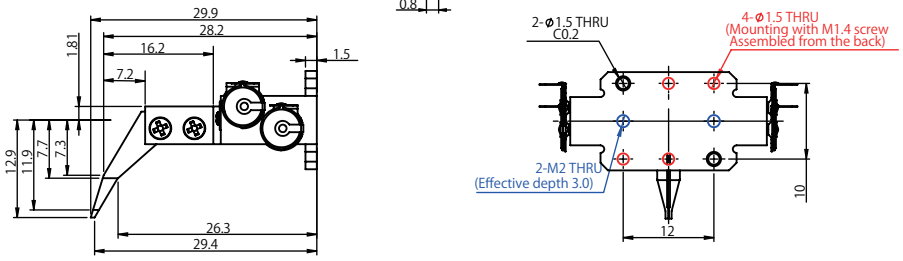

- Specification -
1. Maximum opening time stroke : 3mm
2. Thrust : 50gf
3. Holding power : 150gf
4. Control : Pulse and command control
5. Weight : 14.8g
6. Weight capacity : 15g
7. One side finger separately controllable
8. Open control

Finger Unit (with Encoder)　FDUT50-037

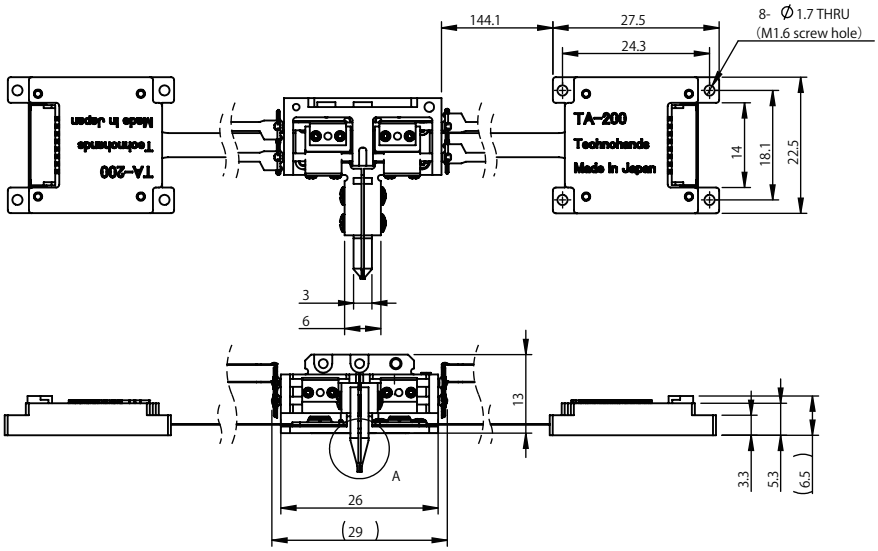

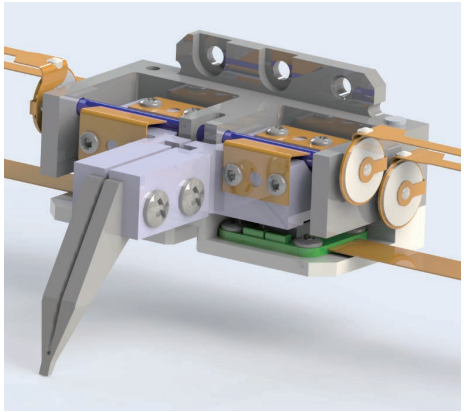

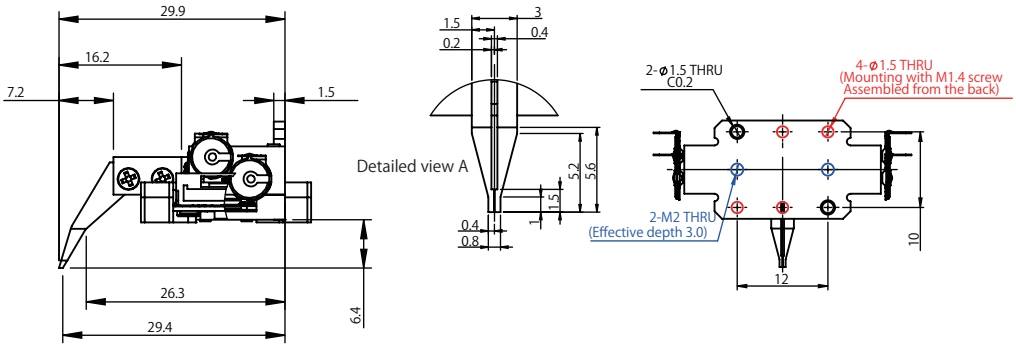

- Specification -
1. Maximum opening time stroke : 3mm
2. Thrust : 50gf
3. Holding power : 150gf
4. Control : Pulse and command control
5. Resolution : 0.1 μm
   Selection :0.1、0.5、1.0、5.0 μm
6. Weight : 16g
7. Weight capacity : 15g
8. One side finger separately controllable

Ultrasonic motor ·Finger Series

Stage type finger Unit FSDUT50-060

FUDT 50 – 03 Stage finger model with increased rigidity of model

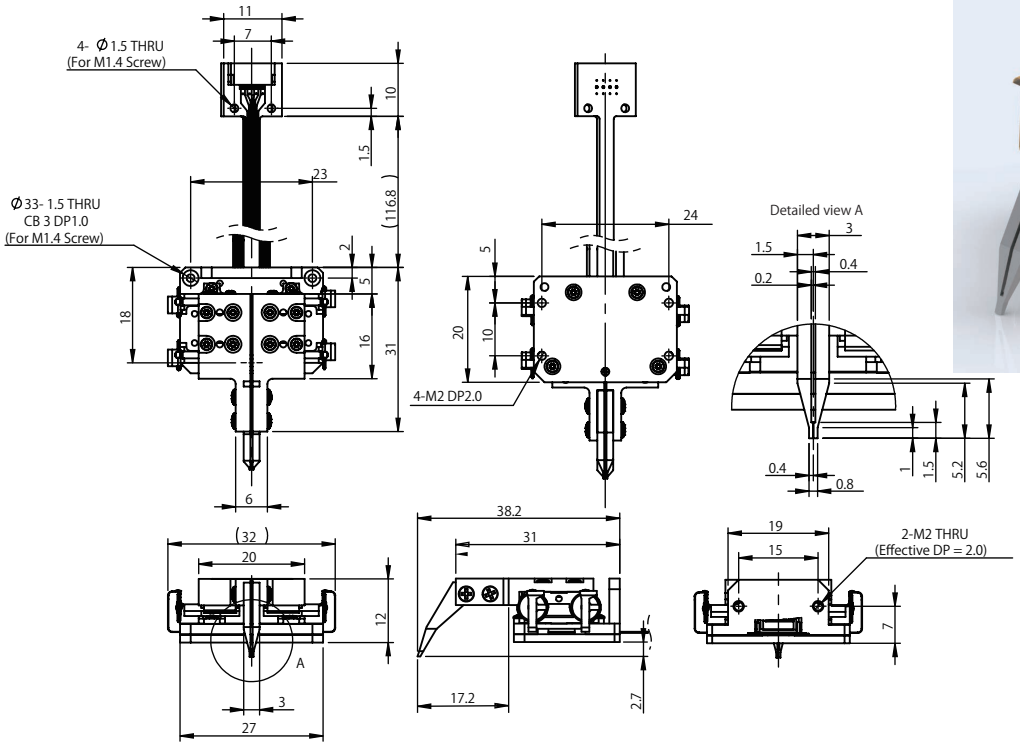

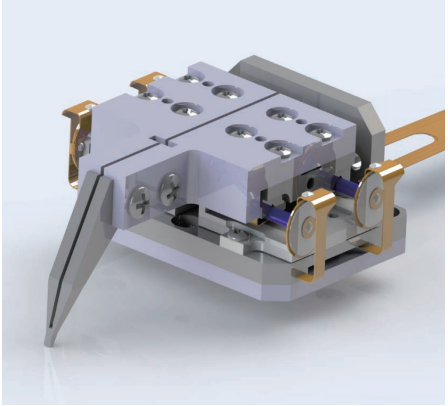

– Specification –

1. Maximum opening time stroke : 6mm
2. Thrust : 50gf
3. Holding power : 150gf
4. Control : Pulse and command control
5. Weight : 23.8g
6. Weight capacity : 15g
7. One side finger separately controllable
8. Open control

Stage type finger Unit/(with Encoder) FSDUT50-067

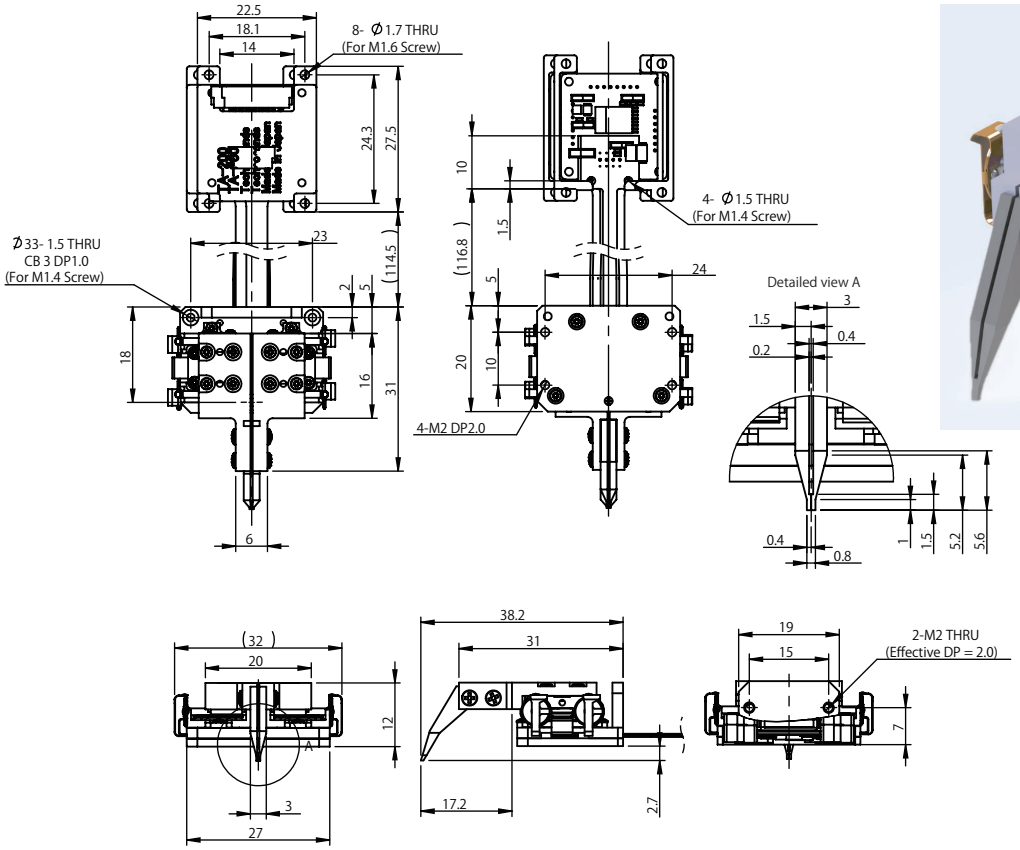

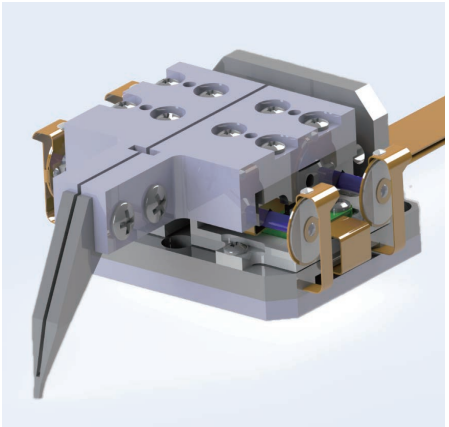

– Specification –

1. Maximum opening time stroke : 6mm
2. Thrust : 50gf
3. Holding power : 150gf
4. Control : Pulse and command control
5. Resolution : 0.1 μm
   Selection : 0.1、0.5、1.0、5.0 μm
6. Weight : 25g
7. Weight capacity : 15g
8. One side finger separately controllable

Ultrasonic motor ・Finger Series

Finger Unit(Linear guide type)＋Zaxis Stage　FLGUT70-035/ZLGT70-060

The finger and the Z axis which raised the precision by 4 axis linear guide.
The finger alignment is strengthened with the drive system in each.

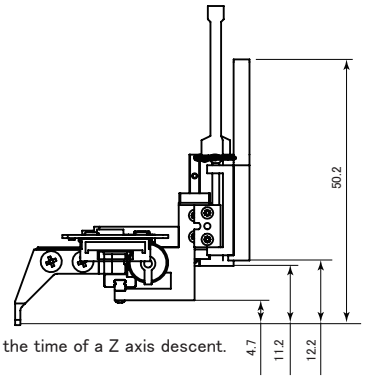

At the time of a Z axis descent.

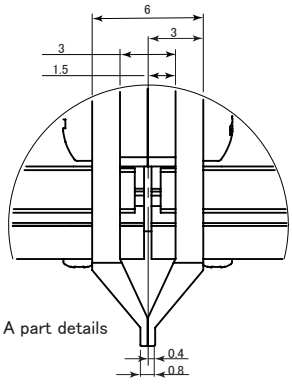

A part details

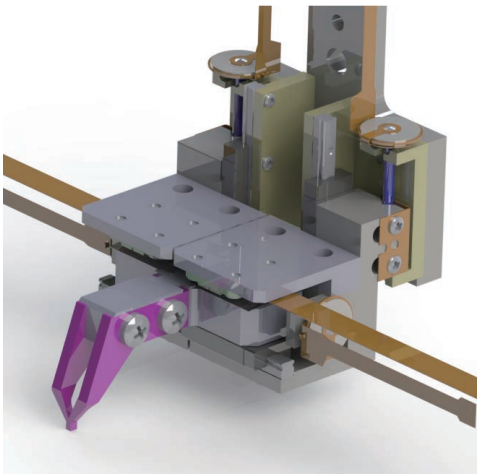

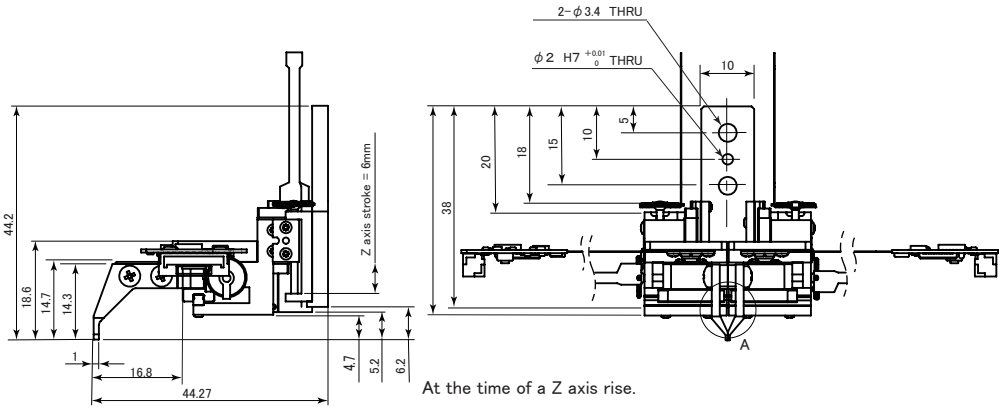

At the time of a Z axis rise.

- Specifications -
1. Guide : Linear guide
   Z : 2pcs、Finger : 2pcs
2. Actuator type : TULA70　4pcs
3. Max opening stroke : 1.5mm×2
   Z stroke : 6mm
3. Resolution : 1.0μm/pulse
   Selection :0.1、0.5、1.0μm
4. Thrust Power : 20gf
5. Holding Force : 70gf
6. Weight capacity : 10g
7. Finger : with Encoder Z : Open loop
8. Weight : Approximately 36g

Finger unit a reference example

※It'll correspond to the finger which was added to the shape of the minute part by which it's for an optical component.
※For turning on-lessness, the time of a clamp doesn't do vibration and fever at all because ultrasonic motor is being used.


One side V ditch clamp
for anOptical fiber etc.


Soft body pickup clamp

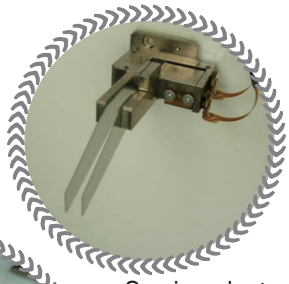
Semiconductor electric
continuity inspection
electrode clamp


□0.7mm
Clamp of the lens


Minute clamp of the lens


A finger point is a micro hook.

※※ We'll handle design and manufacture of the Finger unit you want.

Ultrasonic motor・Applications (Micro manipulator)

Stage & finger combination unit example

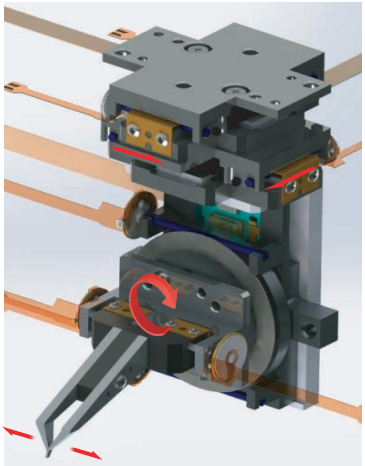

◆XY θ F type
(XY Stage : 0.1 μm、θ : 0.005°)

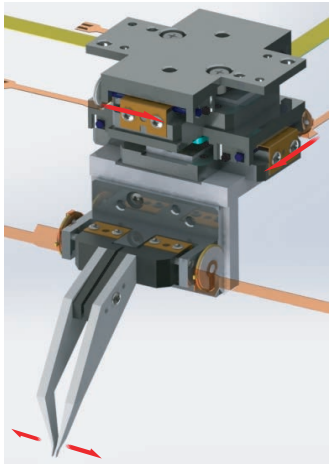

◆XYF type
(XYStage : 0.1 μm)

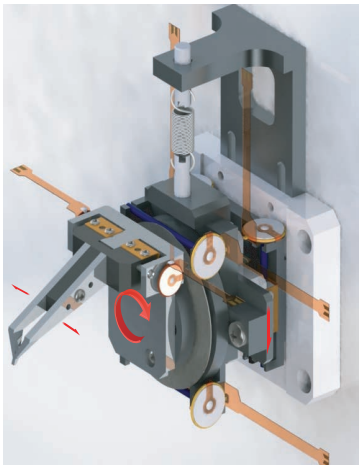

◆Z θ F type
(Z Stage : 0.1 μm、θ : 0.005°)

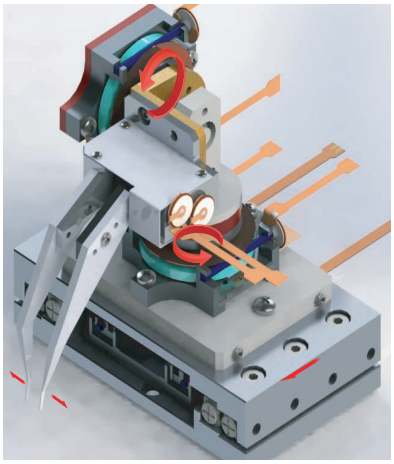

◆X θ 1 θ 2F type
(X Stage : 0.1 μm、θ : 0.005°)

Handling of an optical component

・It can be useful for a handling of a minute part and the work suppression when gluing together

※A finger department responds to the demand for you and produces by a precise and special Optical shaping machine. (In resin,metallurgical coating)

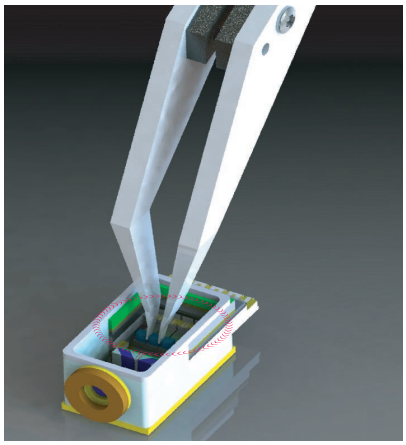

Optical lens module assembly

– Specifications –

1. Motor formula : Ultra sonic linear actuator
2. Thrust power : 35gf
3. Holding force : 150gf
4. Positioning accuracy : 0.5 μm
5. Position sensor : Optical encoder
6. Maximum speed : 10mm/sec
7. Control : command, pulse/dir input
8. Communication : RS232, USB, RS485

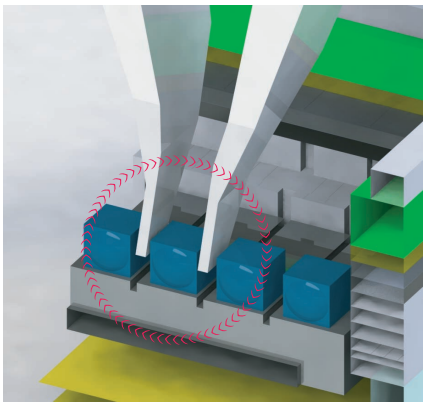

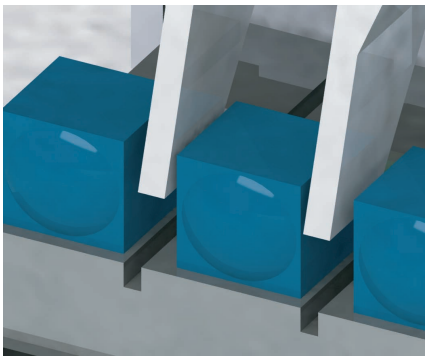

Lens size: 0.7mm × 0.7mm × 0.7mm

※ We accept various design productions on request.

Ultrasonic motor・Applications (Micro manipulator)

SCARA robot (5 axes : 3 axes for rotation, Z axis, 1 axis for the Finger)

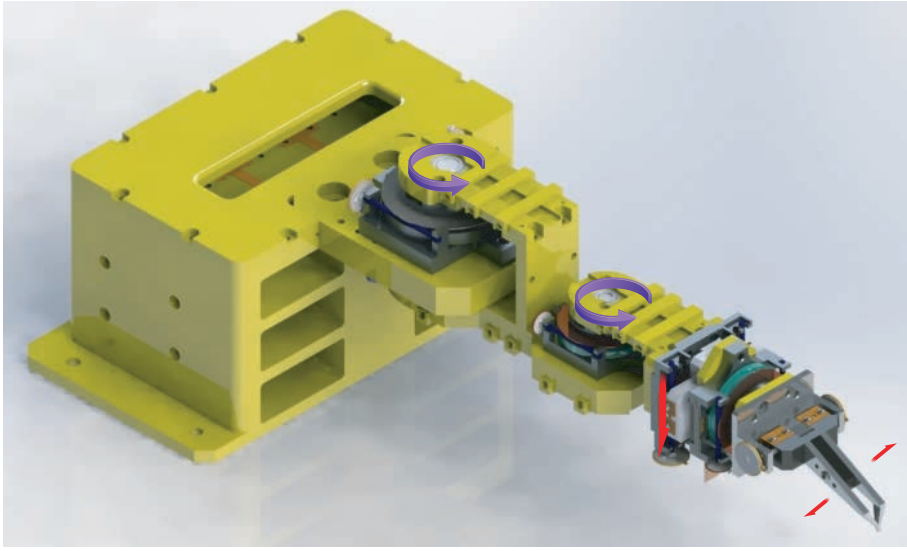

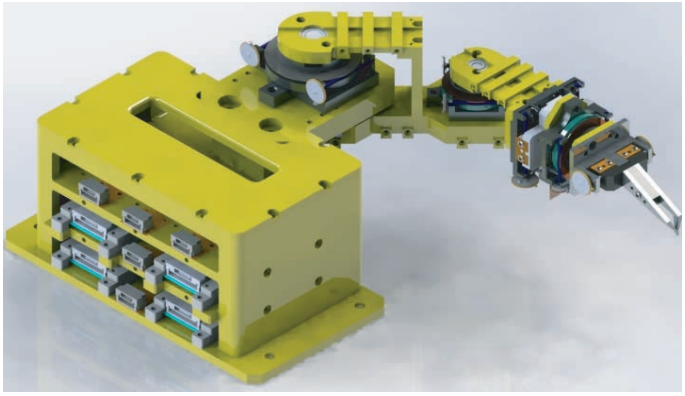

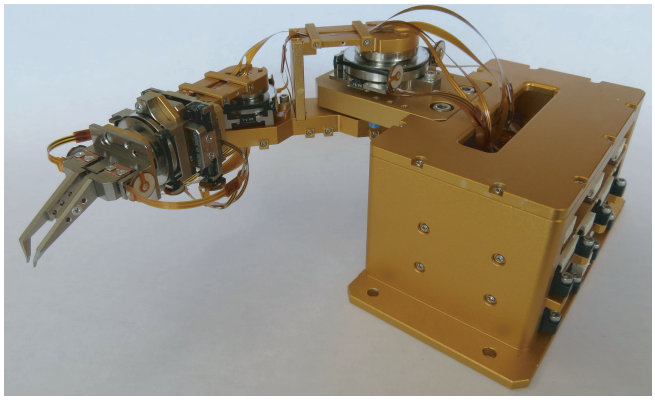

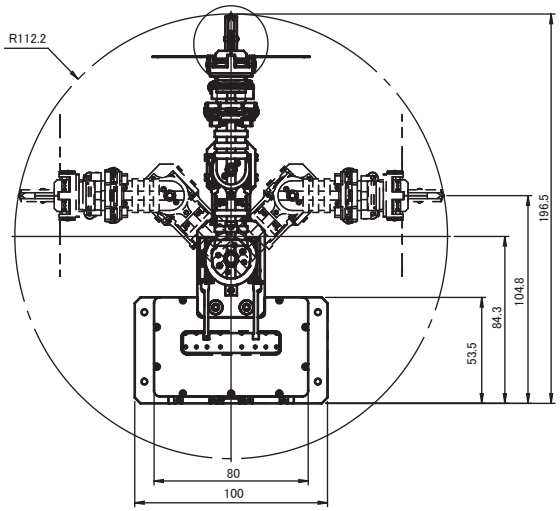

This is robot that can handle small parts such as optical parts, etc.
High precise positioning is possible because its finger point doesn't vibrate different from electromagnetic motors.
As an example, it enables to stable glue optical small parts when UV-hardening.

- Specifications -
1. Type : SUT70-180-6
2. Maximum stroke : θ1, θ2, θ3 : ±180°
   Z axis : ±5mm
   Finger : 0～3mm
3. Resolution : θ1, θ2, θ3 : 0.005°
   Z axis : 0.1 μm
4. Thrust force : 10gf
5. Holding force : 10gf

＊Custom designing is available

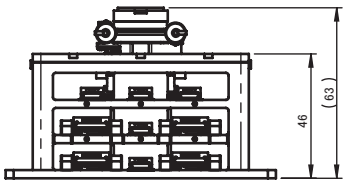

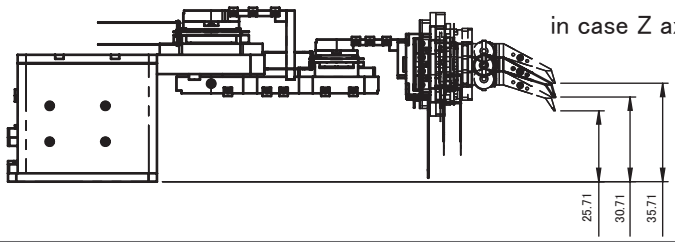

in case Z axis moves ±5.0mm

Ultrasonic motor・Driver (TULA35、50、70)

● TD-102 (for 1axis)

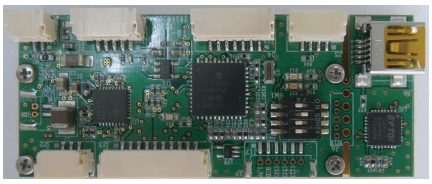

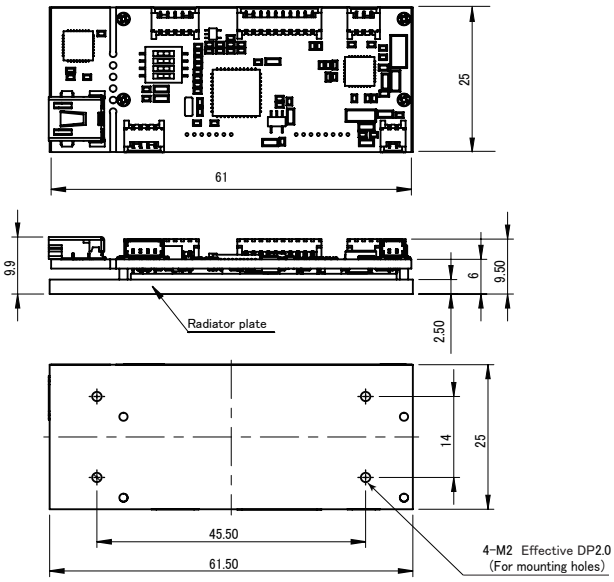

● TD-201 (for 2axes)

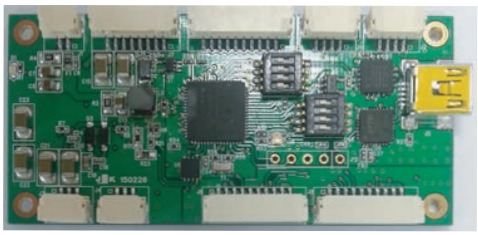

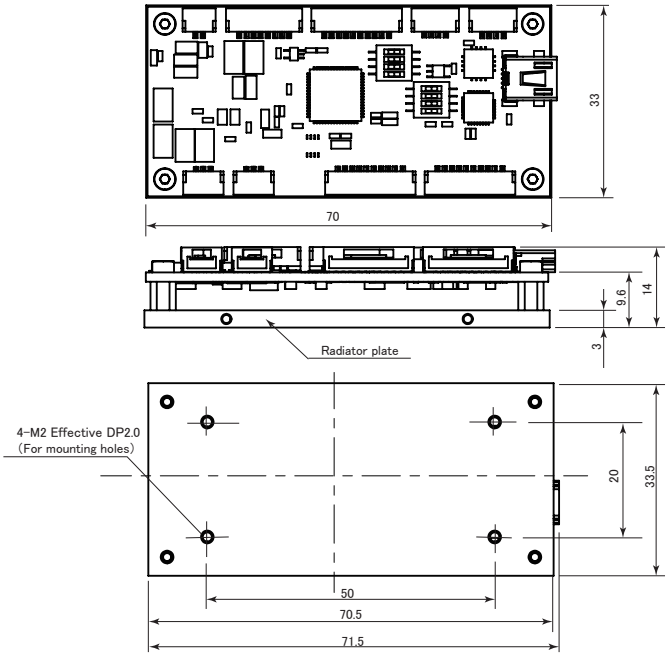

Features / Specifications

– Feature –

1) TULA35、50、70 exclusive driver
2) Precise location control
   ・Available opened loop control by pulse input method
   ・Enabling high position precision with optical encoder
3) Selectable input way for command
   ・External pulses command input
   ・Command code input (by accessory software)
4) Corresponding to communication by USB2.0 and a RS232C
5) TD-201 : RS485 communication correspondence
6) TD-201 : Prepared to 32 axes by parallel connection.

– Specifications –

1. Supply voltage : DC5V/1A
2. Driving voltage : 16～35V
3. Driving frequency : 20～100KHz
4. Output duty : 0～48%
5. Interface to PC : USB (FTDI FT232R
6. Accessory software : TULA Controller Manager/ for Windows
7. Operating Temp/Humidity : 0～+50℃ / 0～80% (without dew condensation)
8. Storage Temp/Humidity : -20～+70℃ / 0～80% (without dew condensation)

● TD-102、TD-201 with Housing

TD-102C (for TD-102)

・ W64.3 x D27 x H19mm
(protruding parts not included)
・ built-in cooling fan

TD-201C (for TD-201)

・ W89 x D36 x H21mm
(protruding parts not included)

Ultrasonic motor ・ Jog Controller

Jog Unit （ for 1 axis / 4 axes ）

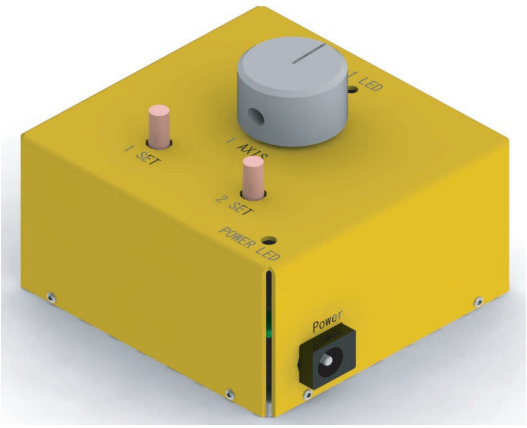

TD-102&DIO-1604 （for 1 axis）

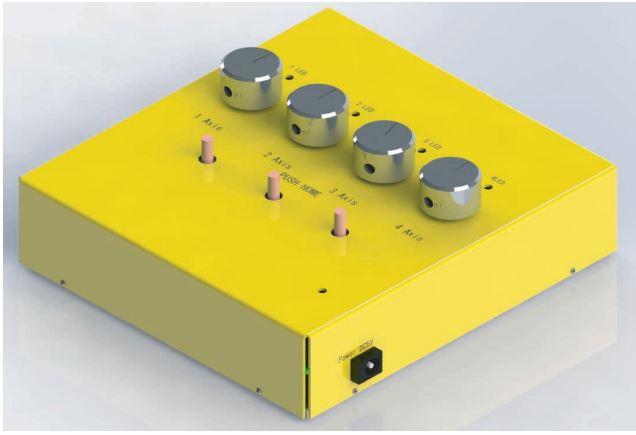

TD-102&DIO-1603 （for 4 axes）

Features / Specifications

- Use / Features -

1） Stroke movement in a standard stage (TULA series) can be performed by the Jog unit.
2） 2 switches on the unit for 1axis will be a change in a flutter and a tremor.
3） 3 switches on the unit for 4axes will be a flutter, a tremor and the reference point restore operation of all axes. (Each stage with encorder type only)
4） 2 switches on 2 units(for 1axis,4axes) can be chosen before purchase to the switch you move to the designated location optionally.
5） The reference point restore operation is performed by pressing the Jog switch with a unit for 1axis in case of Stage with an encoder.
6） Generally connect to a stage with an encoder, press the Jog switch and make them do return to origin. And turn the Jog switch and decide 1 or point 2 .Then inputs the address to PC program, and you move to the point by 2 switches.

- Specifications -

	1 axis : TD-102&DIO-1604	4 axes:TD-102&DIO-1603
Power Supply	DC5V/2A	DC5V/4A
Power Consumption	10W	20W
Operating Temp.	0～50℃	
Storage Temp.	-20～70℃	
Relative Humidity	0～80% (without dew condensation)	
Size	W69×D63×H49	W132×D144.2×H48.6
Weight	110g	440g
Jog Switch	1 pc [CW/CCW]	4 pcs [CW/CCW]
Home Switch	1 pc	4 pcs [CW/CCW]
All axes Home SW	-	1 pc
Flutter SW	1 pc	
Tremor SW	1 pc	

※Please inquire about details.

Ultrasonic motor ・ Jog Controller

Outline of a PC program for TD-102 (TULA Controller Manager/ for Windows)

1. Motor control (Only with an encoder)

① The order location and the stop place can be checked by a chart and log data.
② The pulse fluctuation when moving, can be confirmed in a time axis.
③ Movement by an absolute coordinate and a relative coordinates is possible.

2. Opened loop control (Only without an encoder)

① When there are no feedbacks from an encoder, it's the mode to use.
But, When it's with an encoder, a pulse in the present location is shown to Position(step).
② It'll be a driven order from time by the setting frequency or number of pulse.

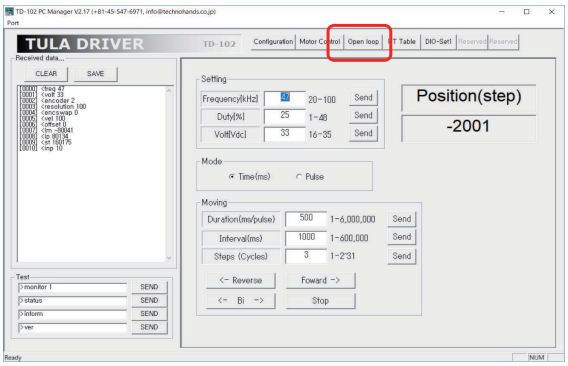

3. PT table (Only with an encoder)

① At most 50 points of positioning programming is possible.
② Dwell time setting after the respective positioning is possible.
③ In number of repetition designation by the step cycle. Repeat movement is possible.

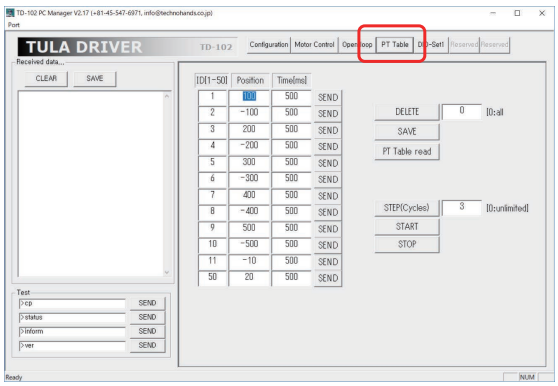

4. DIO Jog (encoder both type)

① The setting screen when using the Jog unit.
② When it's arbitrary position-type, a movement point is input. When it's speed choice, a travel time of 1 click of a flutter and a tremor is set.
③ A movement setting point is 2 points.

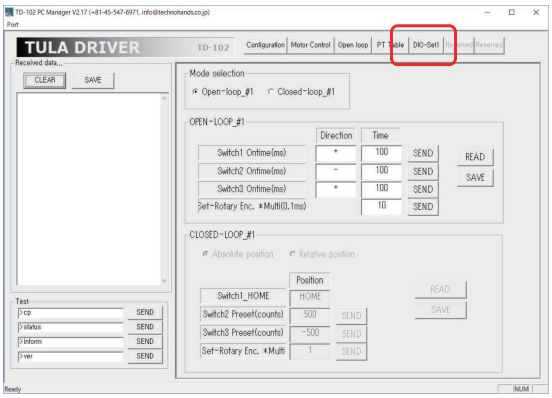

※ It'll be simple software which attaches to TD-102 and TD-201.

Ultrasonic Motor・Option

TULA drive cable

◆Optional products

① Motor cable 1m
model: TMCA1MJ

② Encoder cable 1m
model: TECA1MJ

③ AC adapter model:TAC5V
with USBケーブル
model:TUSB1M

④ RS232C cable 1m
model: TRCA1MJ

⑤ Pulse command cable 1m
for 1 axis
model: TPCA1MJ

⑤ Pulse command cable 1m
for 2 axes
model: TPCA1MJ-2

General use cable

① Specialized motor cable for connecting a stage to a driver.
② Specialized encoder cable for connecting a stage to a driver.
③ AC adapter(5V for driver board) with USB cable.
for connecting PC to the driver board.

Outside communication cable

④ RS232C cable for connecting PC to a driver.
⑤ Cable for inputting pulse command.

TULA Connection example

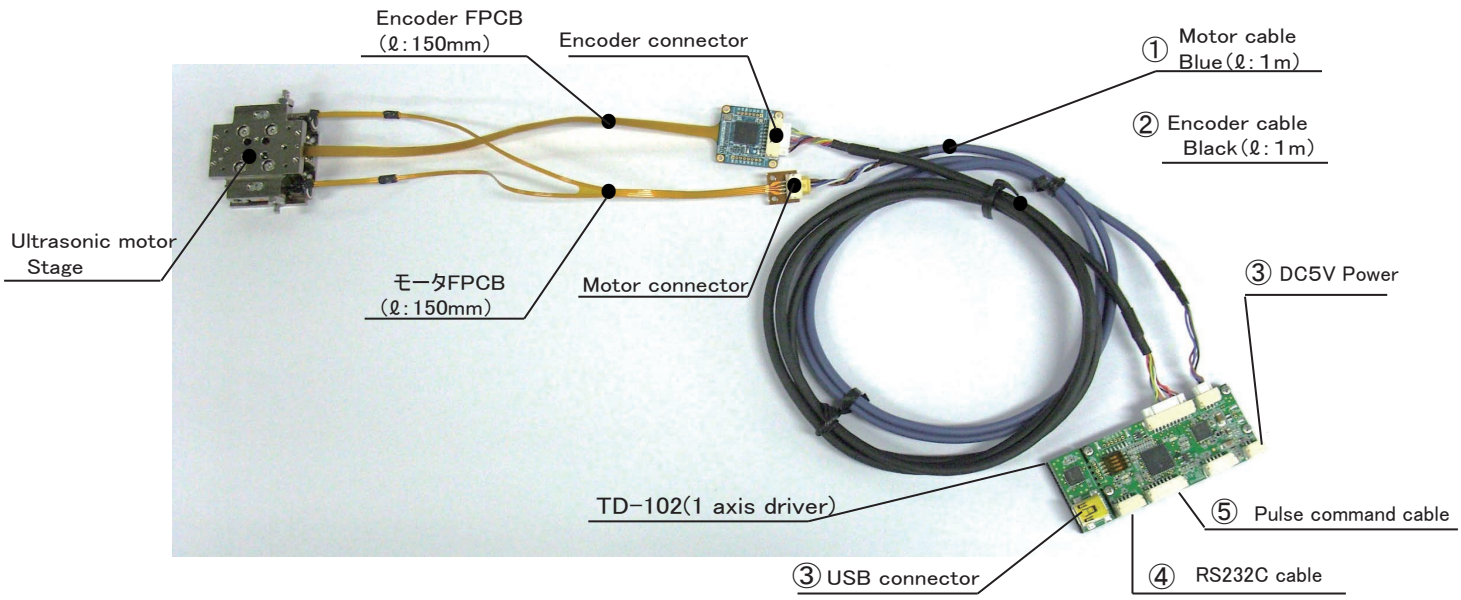

※ Encoder/Motor FPCB length and All kinds' extension cable. Please inquire.

TULA Built-in Encoder TA-200

Tiny & high resolution Optical Encoder

The TA-200 adds an interpolator function to an ultra-thin optical reflective incremental encoder. The LED light source and photodetector are packaged into an optical head, and a complete sinusoidal wave of 80 μm is outputted in A-B phase in a differential manner. TA-200 is mounted on the TULA series linear motion, rotation stage and fingers.

■ Features

- Small and thin optical sensor head TA-200 Size: 10 × 15 × 1.66 mm realized.
- It can arbitrarily select the multiplication factor up to 200 times, further multiplied by 4, adopting the minimum resolution: 0.1 μm.
- The gap tolerance with the scale is as large as 0.75 ± 0.25 mm, and it is easy to install due to the Auto Calibration function.
- Z phase is provided on the incremental line of phase A and phase B, and the scale achieves a small width.
- Low price is realized by adopting nickel steel for scale.
- It also corresponds to without TA - 200 case, and achieves a very small size: 8 × 9 × 1.66 mm.
  ※In the TULA series, we have adopted the TA-200 caseless.

TA-200

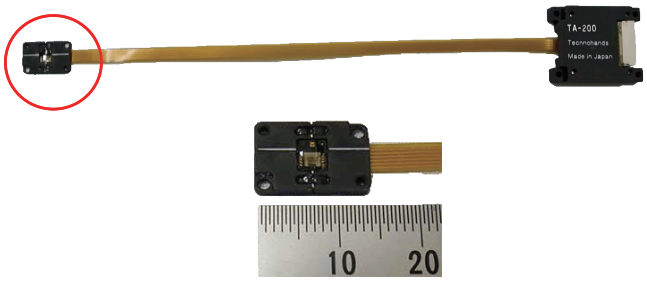

★Our company's smallest encoder

TA-200 (Caseless)

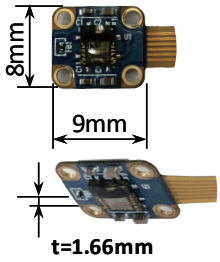

TULA Stage XMDT 50-057 Structure

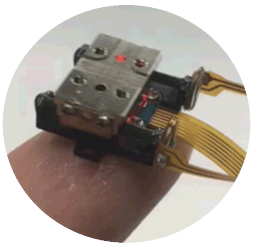

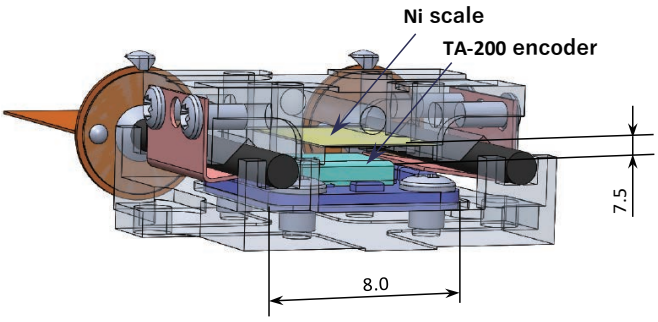

TULA Stage θMDT 50-1802 Structure

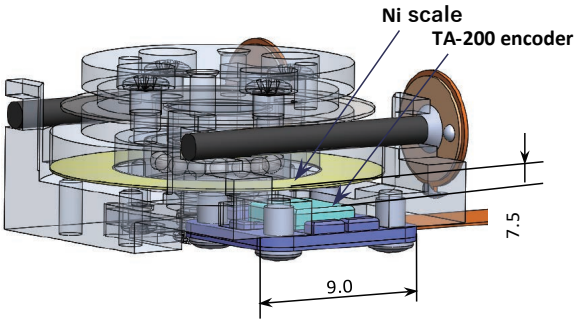

TULA Built-in Encoder TA-200

Tiny & high resolution Optical Encoder

TA-200

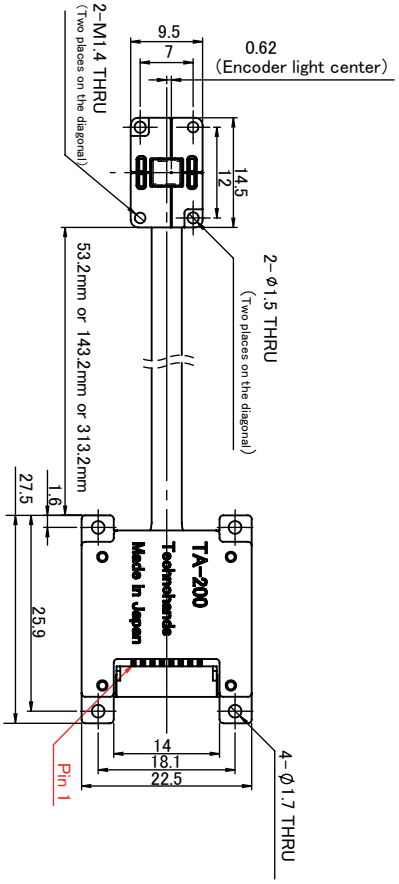

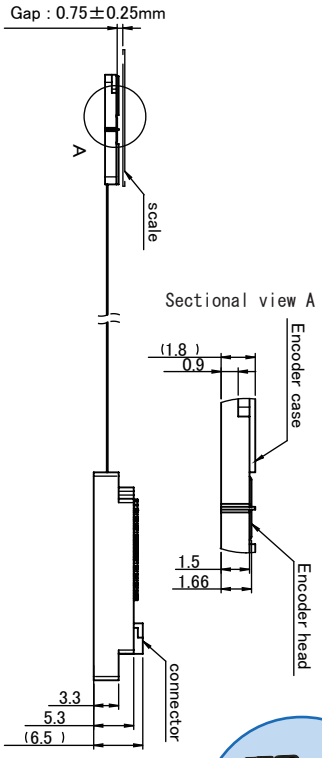

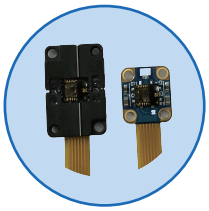

TA-200 (Caseless)

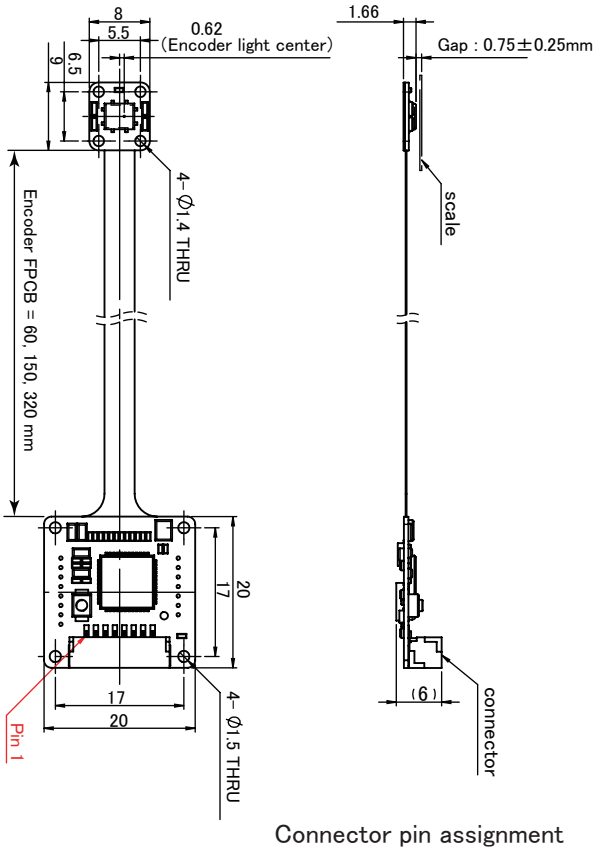

Connector pin assignment

Connector: JST CM08B-GHS-TB

Pin.No	Signal
1	GND
2	DC5V
3	A+
4	A-
5	B+
6	B-
7	Z+
8	Z-

Operating environment

Method		Optical diffraction reflection method
Power supply		DC5V±5%, max 50mA
Environment condition	Operation temperature/humidty	-10～60℃, below 90%RH
	Storage temperature/humidty	-20～80℃, below 90%RH

Linear scale

【mm】

Model	Stroke	Materials	Thickness (t)	L	Z
S80L15N	15	Ni steel	0.2	20	10
S80L30N	30	Ni steel	0.2	35	17.5

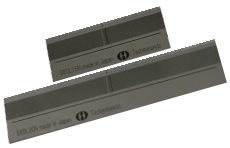

Rotary scale

【mm】

Model	Palse number	Materials	Thickness (t)	D	d	Optical center position
S80R500N	500	Ni steel	0.2	φ16	φ10	φ12.75
S80R900N	900	Ni steel	0.2	φ25.92	φ19.92	φ22.92
S80R1200N	1,200	Ni steel	0.2	φ36.5	φ24.5	φ30.56
S80R2000N	2,000	Ni steel	0.2	φ56	φ47.93	φ50.93

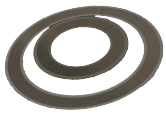

Akribis Worldwide Offices and Distribution Network

Manufacturing Facilities

Akribis Systems Pte Ltd — HQ
5012 Techplace II Ang Mo Kio Ave 5 #01-05
Singapore 569876
Tel: +65 6484 3357
www.akribis-sys.com
cust-service@akribis-sys.com

Akribis Systems (Shanghai) Co., Ltd
A2, No.6999, Chuan Sha Rd, Pudong New Area,
Shanghai, 201202
Tel: +86 21 5859 5800
www.akribis-sys.cn
cust-service@akribis-sys.cn

Akribis Systems (Nantong) Co., Ltd
Floor 2, Building 7, Boding Machinery,
Industrial Park, Xingyuan Road, Tongzhou,
Nantong, Jiangsu Province, 226000
Tel: +86 0513 8655 1333
www.akribis-sys.cn
cust-service@akribis-sys.cn

Akribis Systems Sdn Bhd (Selangor)
Lot 5815-A, Jalan Mawar, Taman Bukit
Serdang,Seksyen 9, 43300 Seri Kembangan,
Selangor D.E.
Tel: +603 8957 5815
www.akribis-sys.com
cust-service@akribis-sys.com

Akribis Systems (Shanghai) Co., Ltd Dongguan Branch
Room 101, Building 4, No.12, Guliao 1st Road,
Tangxia Town, Dongguan, Guangdong Province
Tel: +86 0755 23777203
www.akribis-sys.cn
cust-service@akribis-sys.cn

Akribis Systems Korea Co., Ltd (Siheung)
1F/2F, 50, Maehwasandan 3-gil, Siheung-si,
Gyeonggi-do, 14931, Republic of Korea
Tel: +82 31 509 5033
www.akribis-sys.co.kr
cust-service@akribis-sys.co.kr

Branches

North America

Boston
Tel: +1 508 934 7480
www.akribis-sys.com
cust-service@akribis-sys.com

San Jose(Silicon Valley)
Tel: +1 408 913 1300
www.akribis-sys.com
cust-service@akribis-sys.com

Europe

Erlangen
Tel: +49 9131 81179 0
www.akribis-sys.de
sales@akribis-sys.de

Middle East

Kfar-Saba
Tel: +972 5430 0036 5
www.agito-akribis.com
agito.info@akribis-sys.com

Asia

Hang zhou
www.akribis-sys.cn
cust-service@akribis-sys.cn

Penang
www.akribis-sys.com
cust-service@akribis-sys.com

Pathum Thani
Tel: +66 8515 10088
www.akribis-sys.com
cust-service@akribis-sys.com

Tokyo
Tel: +81 42 359 4295
www.akribis-sys.co.jp
info@akribis-sys.co.jp

Tao Yuan
Tel: +886 3571868
www.akribis-sys.cn
cust-service@akribis-sys.com

cust-service@akribis-sys.com
www.akribis-sys.com

Disclaimer
This product documentation was accurate and reliable at the time of its release. Akribis Systems reserves the right to change the specifications of the product described in this manual without notice at any time.